1203-00-HV-SDG-786

REFERENCE DRAWINGS	NO.

HVAC STANDARD DRAWING

TOTAL PAGES : 14 (Excluding Cover Sheet)

ED	EXT	IFC	A
Eng. Phase	Purpose of Distribution (POD)	Purpose of Issue (POI)	Owner's Action

PERTROCHEMICAL INDUSTRIES
DESIGN & ENGINEERING CO.
PIDEC PROJ. No. : 1203

SABALAN METHANOL PROJECT

HVAC STANDARD DRAWING

Doc. No.: 1203-00-HV-SDG-786 | Rev. : 01 | Size : A3

OWNER :
SABALAN PETROCHEMICAL INDUSTRIES CO.
PROJ. NO. : 89/S-G/102

REV.	DATE	DESCRIPTION	Prepared	Checked	Approved	Project
01	21.06.2011	ISSUED FOR CONSTRUCTION	M.Moosavi	M.Momenaie	A.Moadeli	N.Jafarpour
00	30.05.2011	ISSUED FOR ENGINEERING	M.Moosavi	M.Momenaie	A.Moadeli	N.Jafarpour

THIS DOCUMENT IS THE PERDPERTY OF SPIC. IT IS CONFIDENTIAL AND ALL RIGHTS RESERVED, NEITHER THE WHOLE NOR PART OF THIS DOCUMENT MAY BE DISCLOSED TO ANY THIRD PARTY, REPRODUCED, STORED IN ANY RETRIVAL SYSTEM OR TRANSMITTED IN ANY FORM OR BY ANY MEANS WITHOUT THE PRIOR WRITTEN CONSENT OF SPIC.

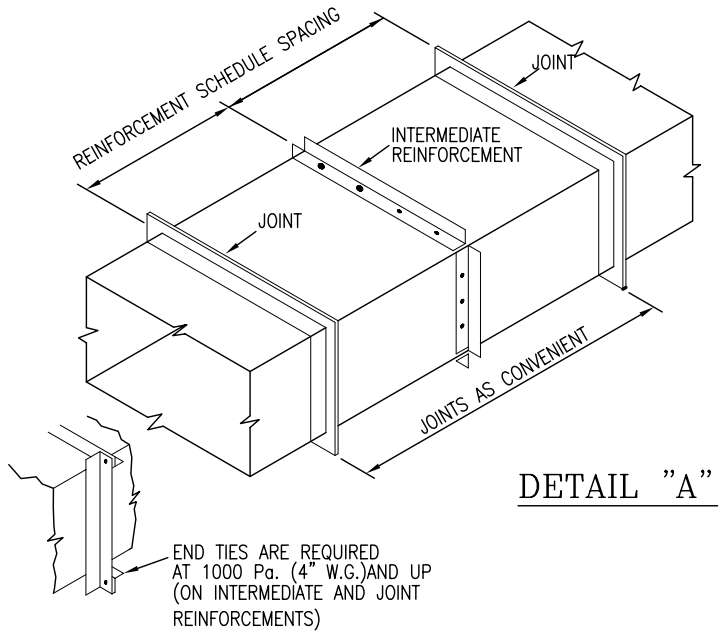

DETAIL "A"

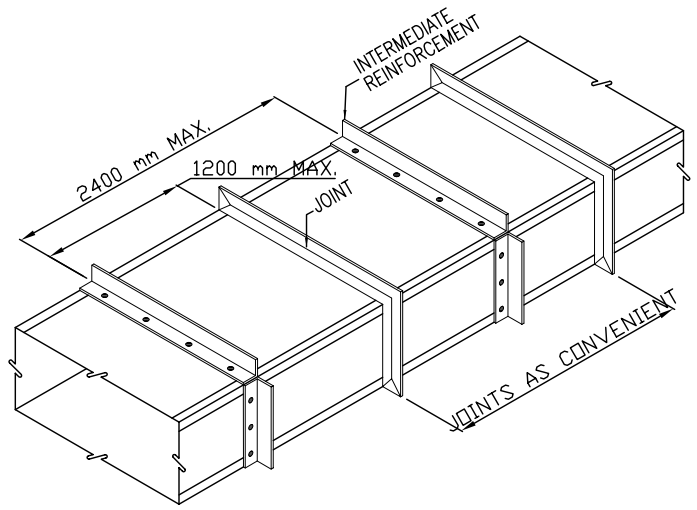

DETAIL "D"
FOR DUCT UP TO 18 in.

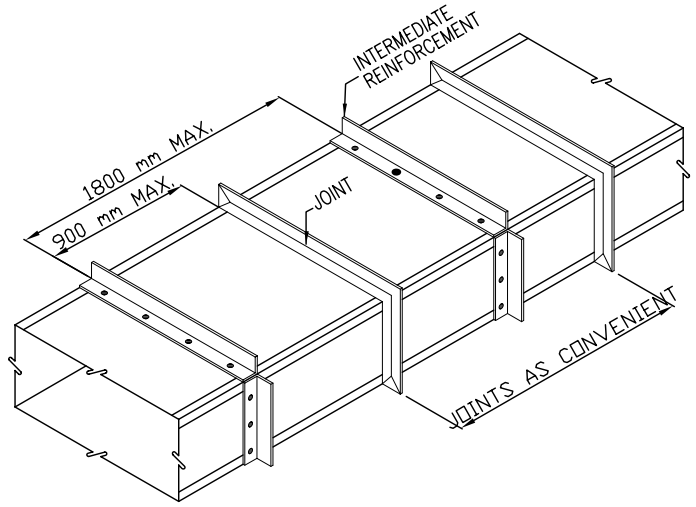

DETAIL "D"
FOR DUCT 19 in. TO 42 in.

NOTE:

1. REINFORCEMENT INTERVAL SPACING PER SCHEDULES MENTIONED IN D-2259-9003-8/11-A3 THIS STANDARD FOR EACH DUCT DIMENSION.
2. INTERVALS NEED NOT NECESSARILY COINCIDE ON ADJACENT SIDES.
3. FOR DUCT SEAM & SHEET METAL SCHEDULE SEE SH. 3 OF THIS DRAWING.

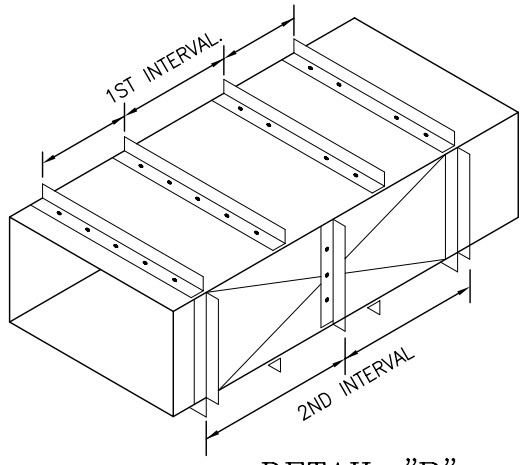

DETAIL "B"

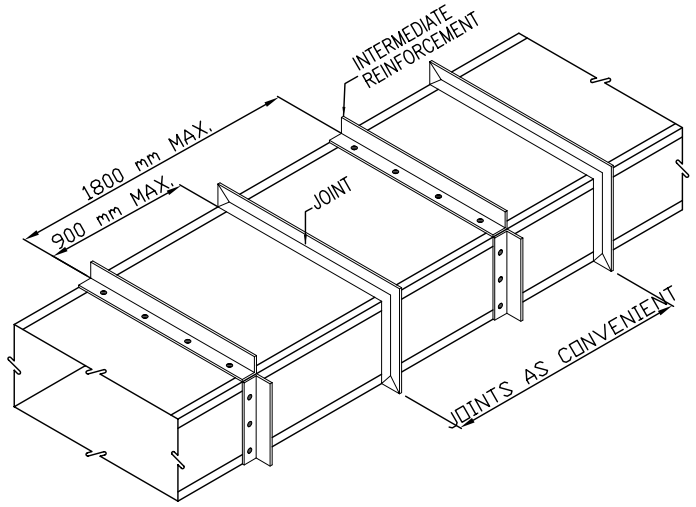

DETAIL "D"
FOR DUCT 43 in. TO 60 in.

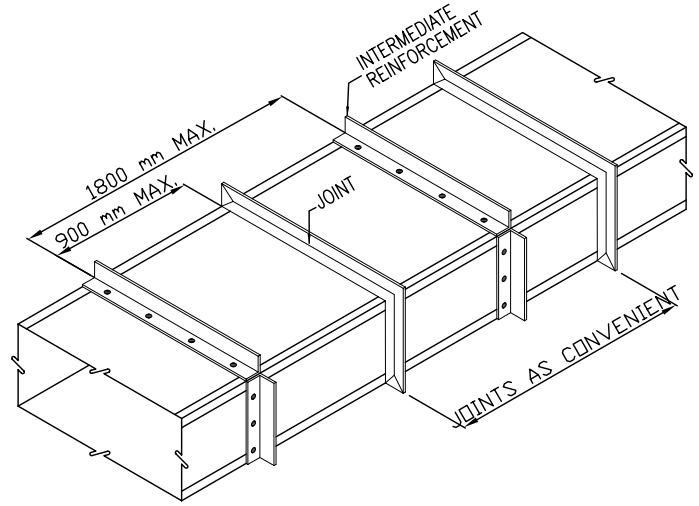

DETAIL "D"
FOR DUCT 60 in. AND UP

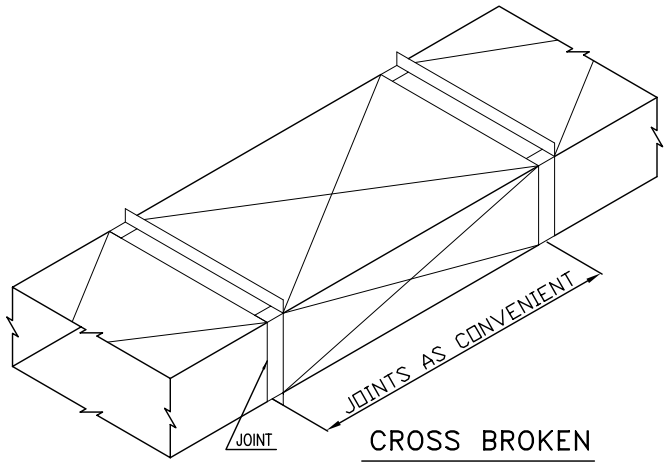

CROSS BROKEN
DETAIL "C"

DUCT REINFORCED ON ALL SIDES

THIS DOCUMENT IS THE PERODPERTY OF SPIC. IT IS CONFIDENTIAL AND ALL RIGHTS RESERVED, NEITHER THE WHOLE NOR PART OF THIS DOCUMENT MAY BE DISCLOSED TO ANY THIRD PARTY, REPRODUCED, STORED IN ANY RETRIVAL SYSTEM OR TRANSMITTED IN ANY FORM OR BY ANY MEANS WITHOUT THE PRIOR WRITTEN CONSENT OF SPIC.

PIDEC PERTROCHEMICAL INDUSTRIES DESIGN & ENGINEERING CO. PROJ. NO. : 1203	SABALAN METHANOL PROJECT HVAC STANDARD DRAWING Doc. No.: 1203-00-HV-SDG-786 Rev. : 01	شرکت صنایع پتروشیمی سبلان سپیکو Sabalan Petrochemical Industries Co. OWNER : SABALAN PETROCHEMICAL INDUSTRIES CO. PROJ. NO. : 89/S-G/102

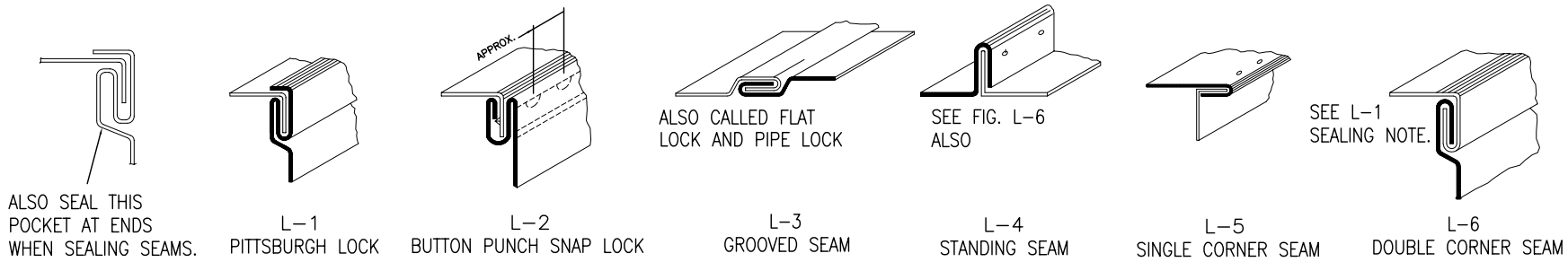

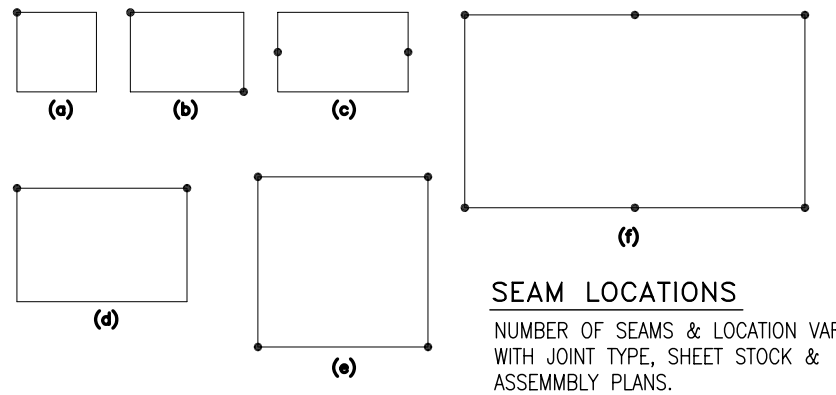

SEAM LOCATIONS

NUMBER OF SEAMS & LOCATION VARIES WITH JOINT TYPE, SHEET STOCK & ASSEMMBLY PLANS.
TO FIND VARIOUS DUCTING CONSTRUCTION DETAILS & ASSEMBLY PLANS REFFER TO DETAIL (A,B,C).

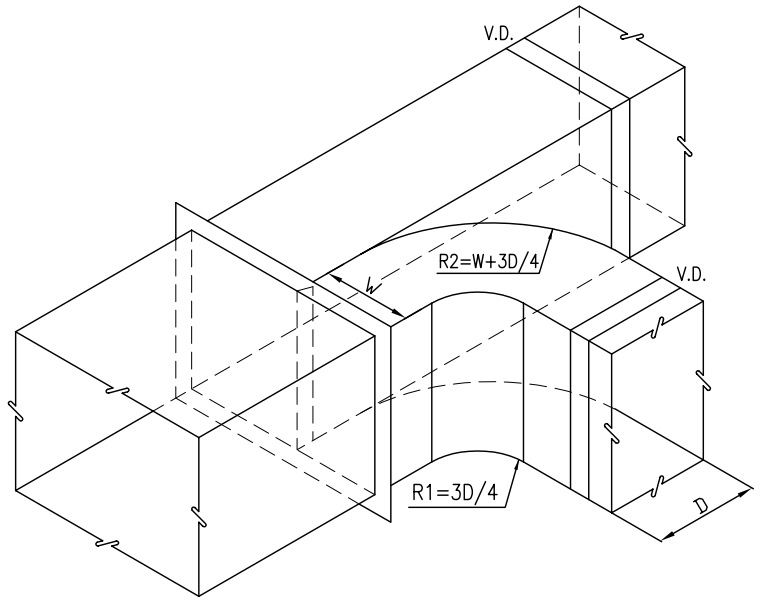

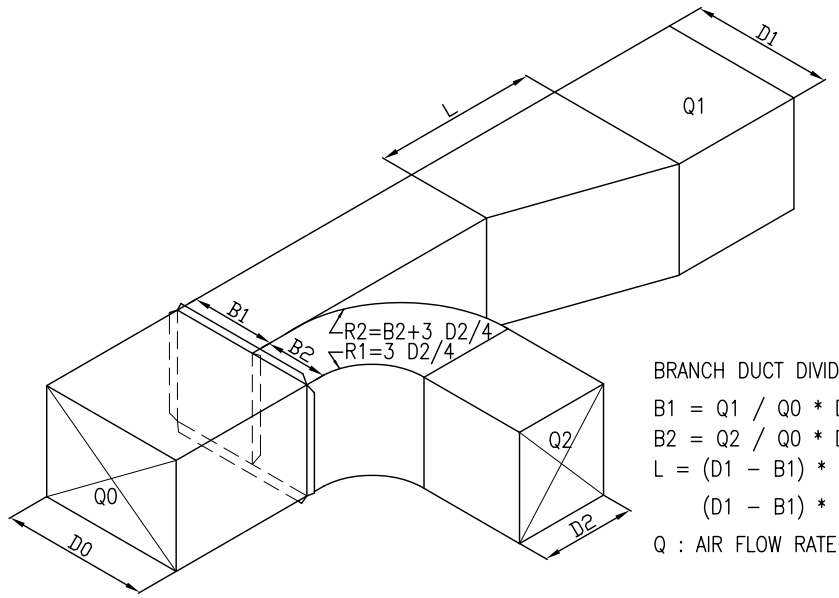

BRANCH DUCT DIVIDING METHOD

B1 = Q1 / Q0 * D0
B2 = Q2 / Q0 * D0
L = (D1 – B1) * (2~4) ECCENTRIC
(D1 – B1) * (1~2) CONCENTRIC
Q : AIR FLOW RATE

BRANCH TAKEOFF
DETAIL A NTS.

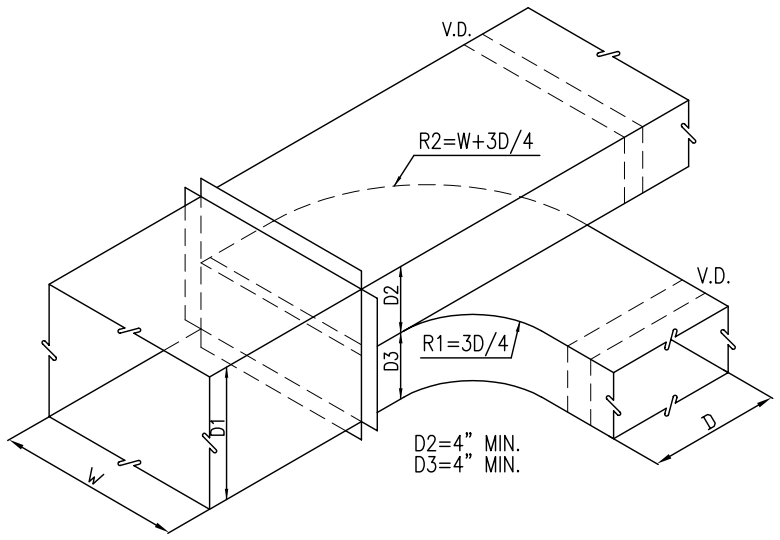

PARALLEL FLOW BRANCHES
DETAIL B NTS.

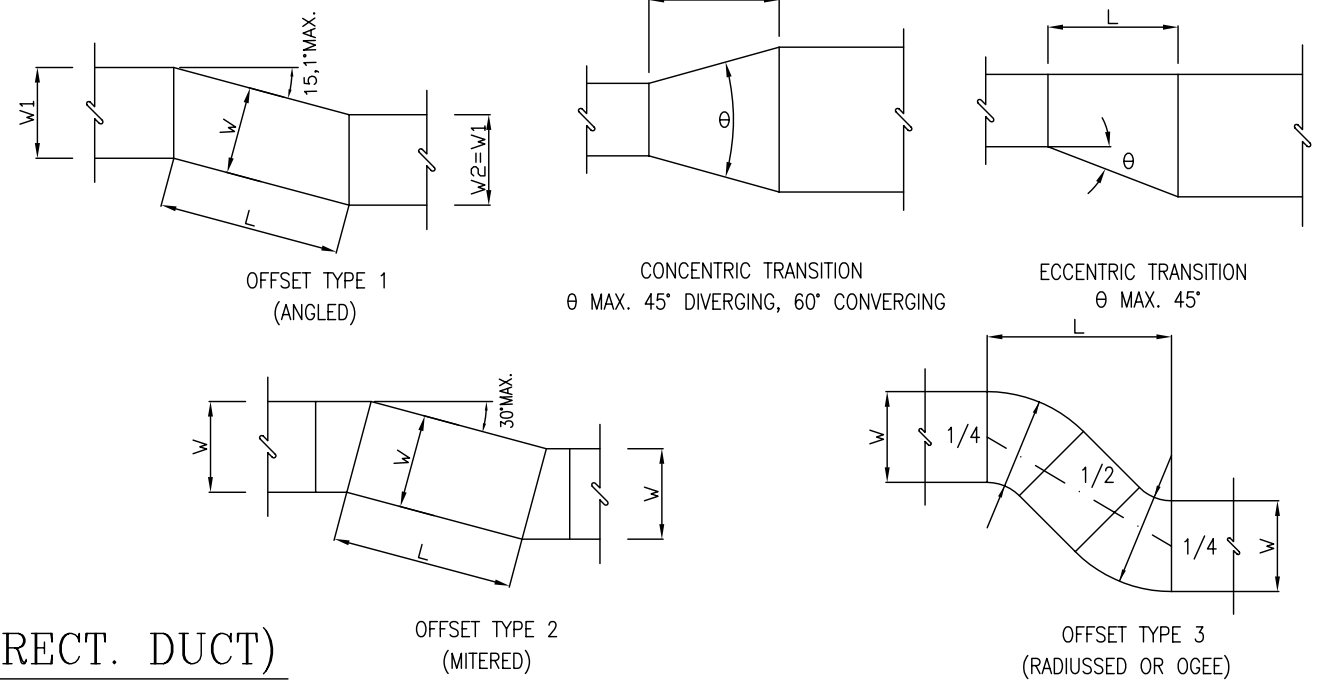

OFFSETS AND TRANSITIONS
DETAIL C

LONGITUDINAL SEAMS (RECT. DUCT)

THIS DOCUMENT IS THE PERDPERTY OF SPIC. IT IS CONFIDENTIAL AND ALL RIGHTS RESERVED, NEITHER THE WHOLE NOR PART OF THIS DOCUMENT MAY BE DISCLOSED TO ANY THIRD PARTY, REPRODUCED, STORED IN ANY RETRIVAL SYSTEM OR TRANSMITTED IN ANY FORM OR BY ANY MEANS WITHOUT THE PRIOR WRITTEN CONSENT OF SPIC.

PERTROCHEMICAL INDUSTRIES DESIGN & ENGINEERING CO. PROJ. NO. : 1203	SABALAN METHANOL PROJECT		OWNER : SABALAN PETROCHEMICAL INDUSTRIES CO. PROJ. NO. : 89/S-G/102
	HVAC STANDARD DRAWING		
	Doc. No.: 1203-00-HV-SDG-786	Rev. : 01	

DIMENSION OF LONGEST SIDE mm. (IN.)	SHEET METAL GAGE (ALL FOUR SIDES)			TRANSVERSE REINFORCEMENT											
				MINIMUM REINFORCING ANGLE SIZE mm. (IN.) AND MAXIMUM LONGITUDINAL SPACING mm. (IN.) BETWEEN TRANSVERSE JIONTS AND/OR INTERMEDIATE REINFORCING	AT JOINTS										
	STEEL	ALUMINUM ALLOY	COPPER		MINIMUM HIGH (mm.)	PLAIN "S" SLIP	HEMMED "S" SLIP	ALTERNATE BAR SLIP	REINFORCED BAR SLIP	BAR SLIP / ANGLE SLIP	REINFORCED ANGLE SIZE mm. IN.	STANDING SEAM / ANGLE REINFORCED STANDING SEAM	POCKET LOCK / ANGLE REINFORCED POCKET LOCK		GASKET OR SEALER / COMPANION ANGLES
	mm.(Ga.)	THICKNESS mm. (IN.)	KG/m² (OZ/ft²)			RECOMMENDED THICKNESS.							RECOMMEN-DED. mm.(Ga.)	REINFORCED ANGLE SIZE mm. IN.	
						mm.(Ga.)	mm.(Ga.)	mm.(Ga.)	mm.(Ga.)	mm.(Ga.)					
UP THRU 300(12)	0.55(26)	0.50 (0.020)	4.85 (16)	NONE RECOMMENDED	25	0.55(26)	0.55(26)	0.70(24)	0.70(24)	0.70(24)	NOT REQUIRED	NOT REQUIRED	0.70(24)	NOT REQUIRED	–
325–450 (13–18)	0.70(24)	0.60 (0.025)	7.30 (24)	NONE RECOMMENDED	25	0.70(24)	0.70(24)	0.70(24)	0.70(24)	0.70(24)	NOT REQUIRED	NOT REQUIRED	0.70(24)	NOT REQUIRED	–
475–750 (19–30)	0.70(24)	0.60 (0.025)	7.30 (24)	25x25x3 & 1500 1x1x1/8 & 60	25		0.70(24)	0.70(24)	0.70(24)	0.70(24)	NOT REQUIRED	NOT REQUIRED	0.70(24)	NOT REQUIRED	–
775–1050 (31–42)	0.85(22)	0.80 (0.032)	9.75 (32)	25x25x3 & 1500 1x1x1/8 & 60	25			0.85(22)	0.85(22)	0.85(22)	NOT REQUIRED	NOT REQUIRED	0.85(22)	NOT REQUIRED	–
1075–1350 (43–54)	0.85(22)	0.80 (0.032)	9.75 (32)	40x40x3 & 1500 1 1/2x1 1/2x1/8 & 60	40			0.85(22)	0.85(22)	0.85(22)	40x40x3 1 1/2x1 1/2x1/8	NOT REQUIRED	0.85(22)	NOT REQUIRED	–
1375–1500 (55–60)	1.0(20)	1.0 (0.040)	11.0 (36)	40x40x3 & 1500 1 1/2x1 1/2x1/8 & 60	40			0.85(22)	0.85(22)	0.85(22)	40x40x3 1 1/2x1 1/2x1/8	NOT REQUIRED	0.85(22)	NOT REQUIRED	–
1525–2100 (61–84)	1.0(20)	1.0 (0.040)	11.0 (36)	40x40x3 & 1500 1 1/2x1 1/2x1/8 & 60	40				0.85(22)	0.85(22)	40x40x3 1 1/2x1 1/2x1/8	40x40x3 1 1/2x1 1/2x1/8	0.85(22)	40x40x3 1 1/2x1 1/2x1/8	–
2125–2400 (85–96)	1.30(18)	1.25 (0.050)	14.65 (48)	40x40x3 & 750 1 1/2x1 1/2x1/8 & 30	40					0.85(22)	40x40x4 1 1/2x1 1/2x3/16	40x40x3 1 1/2x1 1/2x1/8	0.85(22)	40x40x4 1 1/2x1 1/2x3/16	40x40x4 1 1/2x1 1/2x3/16
2425–3000 (97–120)	1.30(18)	1.25 (0.050)	14.65 (48)	50x50x6 & 750 2x2x1/4 & 30	50					0.85(22)	50x50x6 2x2x1/4	50x50x6 2x2x1/4	0.85(22)	50x50x6 2x2x1/4	50x50x6 2x2x1/4
OVER 3000 (120)	1.30(18)	1.25 (0.050)	14.65 (48)	50x50x6 & 750 2x2x1/4 & 30	50					0.85(22)	50x50x6 2x2x1/4	50x50x6 2x2x1/4	0.85(22)	50x50x6 2x2x1/4	50x50x6 2x2x1/4

NOTE:

1. ALL LONGITUDINAL SEAMS SHALL BE PITTSBURGH LOCK.
2. CLOSEST EQUIVALENT IN MILLIMETER DIMENSIONS SHALL BE CONSIDERED.

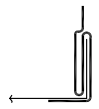

PITTSBURGH LOCK

RECOMMENDED CONSTRUCTION RECTANGULAR LOW PRESSURE DUCT

THIS DOCUMENT IS THE PERPERTY OF SPIC. IT IS CONFIDENTIAL AND ALL RIGHTS RESERVED, NEITHER THE WHOLE NOR PART OF THIS DOCUMENT MAY BE DISCLOSED TO ANY THIRD PARTY, REPRODUCED, STORED IN ANY RETRIVAL SYSTEM OR TRANSMITTED IN ANY FORM OR BY ANY MEANS WITHOUT THE PRIOR WRITTEN CONSENT OF SPIC.

PERTROCHEMICAL INDUSTRIES DESIGN & ENGINEERING CO.
PROJ. NO. : 1203

SABALAN METHANOL PROJECT

HVAC STANDARD DRAWING

Doc. No.: 1203-00-HV-SDG-786 | Rev. : 01

Sabalan Petrochemical Industries Co.

OWNER :
SABALAN PETROCHEMICAL INDUSTRIES CO.
PROJ. NO. : 89/S-G/102

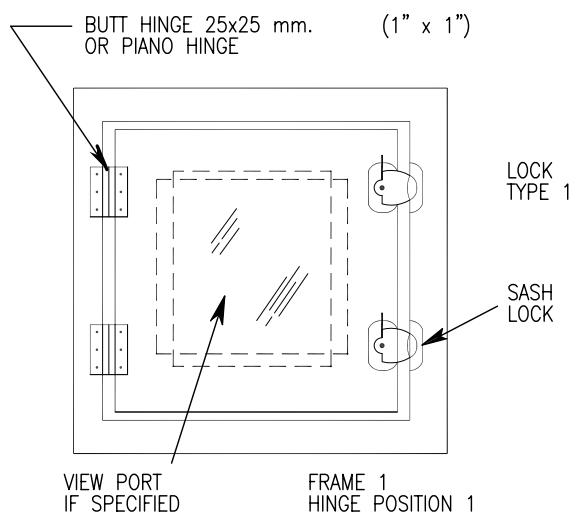

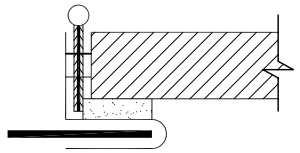

FRAME 2
HINGE POS. 2

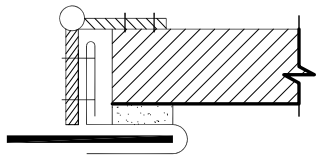

FRAME 3
HINGE POS. 3

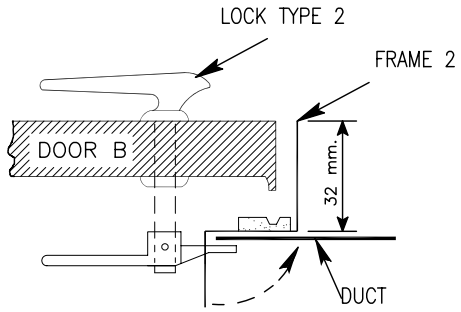

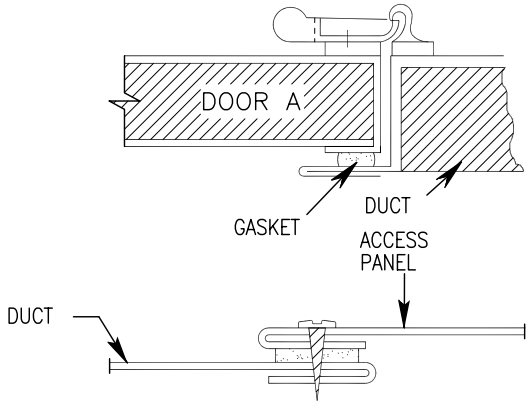

PANEL IS DUCT GAGE (MIN.)
WITH SCREWS AT 200 mm. MAX. SPACING

NOTE:

1. THE ILLUSTRATED ANGLES OF EXPANSION AND CONTRACTION ARE THE MAXIMUM RECOMMENDED.

RECTANGULAR DUCT ACCESS DOORS(REACH THROUGH)

DETAIL A

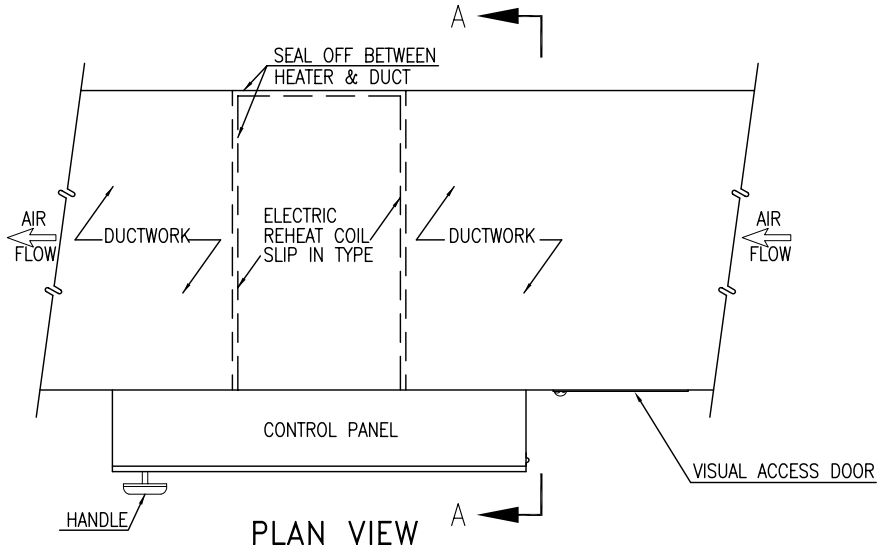

PLAN VIEW

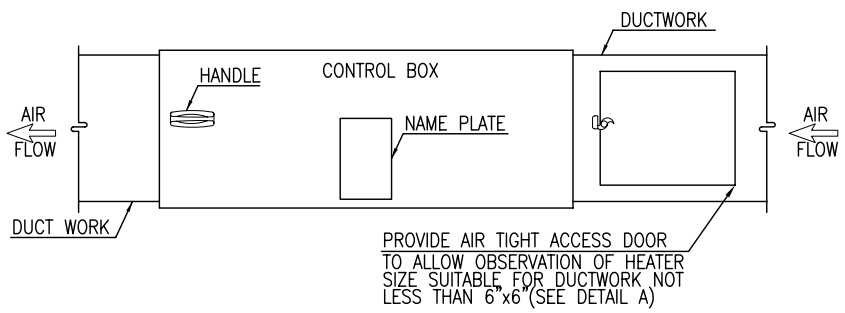

ELEVATION

NOTE:

1. CONSTRUCTION AND AIR TIGHTNESS SHALL BE SUITABLE FOR THE DUCT PRESSURE CLASS USED.
2. CLOSEST EQUIVALENT DIMENSIONS (MILLIMETER) & PRESS (Pa.) SHALL BE CONSIDERD.

STATIC PRESSURE	Door Size(mm.)	No. OF Hinges	No. OF Locks	MATERIAL THK. mm.(GA.)	
				Frame	Door
500 Pa.(2"w.g.) Static and Less	300 x 300	2	1–S	0.70(24)	0.55(26)
	400 x 500	2	2–S	0.85(22)	0.70(24)
	600 x 600	3	2–S	0.85(22)	0.85(22)
750 Pa.(3"w.g.) Static	300 x 300	2	1–S	0.85(22)	0.85(22)
	400 x 500	2	1–S, 1–T, 1–B	1.0 (20)	1.0 (20)
	600 x 600	3	2–S, 1–T, 1–B	1.0 (20)	1.0 (20)
1000 Pa.(4"W.g.) to 2500 Pa(10"W.g.)	300 x 300	2	1–S, 1–T, 1–B	1.0 (20)	1.0 (20)
	400 x 500	3	2–S, 1–T, 1–B	1.0 (20)	1.30(18)
	600 x 600	3	2–S, 2–T, 2–B	1.30(18)	1.30(18)

S = Side opposite hinges, T = Top, B = Bottom

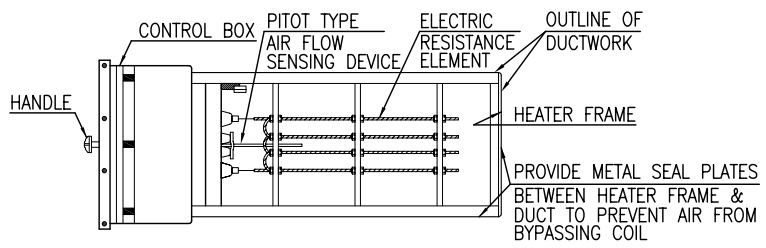

SECTION "A"–"A"

THE DUCT MOUNTED ELECTRIC
HEATING COIL ADJUSTED WITH THE DUCT SIZE

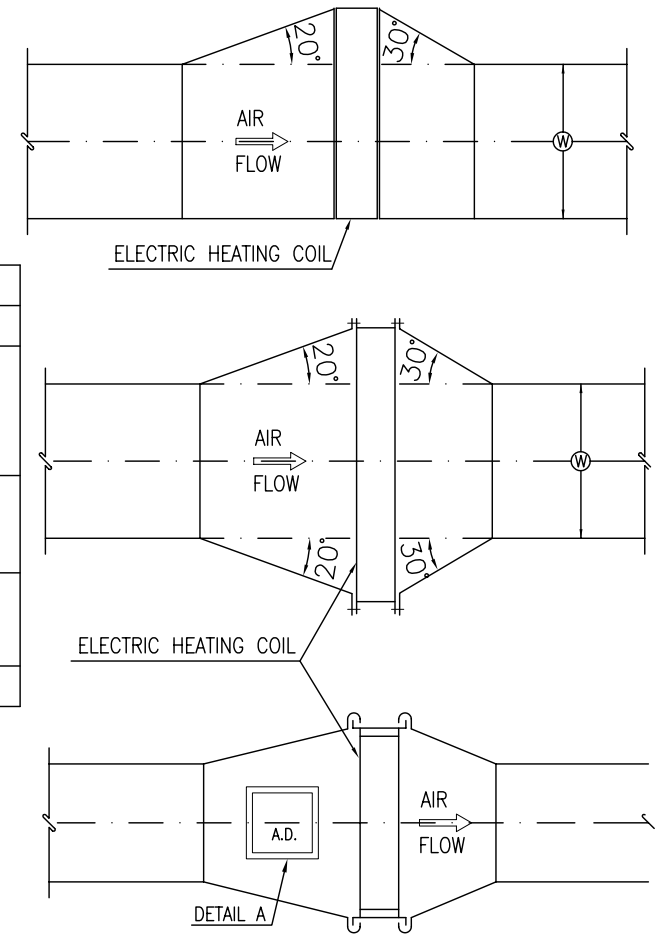

DUCTED ELECTRIC HEATING COIL

DUCTED ELECTRIC HEATING COIL & ACCESS DOOR

THIS DOCUMENT IS THE PERROPERTY OF SPIC. IT IS CONFIDENTIAL AND ALL RIGHTS RESERVED, NEITHER THE WHOLE NOR PART OF THIS DOCUMENT MAY BE DISCLOSED TO ANY THIRD PARTY, REPRODUCED, STORED IN ANY RETRIVAL SYSTEM OR TRANSMITTED IN ANY FORM OR BY ANY MEANS WITHOUT THE PRIOR WRITTEN CONSENT OF SPIC.

PERTROCHEMICAL INDUSTRIES
DESIGN & ENGINEERING CO.
PROJ. NO. : 1203

SABALAN METHANOL PROJECT

HVAC STANDARD DRAWING

Doc. No.: 1203–00–HV–SDG–786 | Rev. : 01

OWNER :
SABALAN PETROCHEMICAL
INDUSTRIES CO.
PROJ. NO. : 89/S–G/102

MULTIPLE FAN UNIT CONNECTION.

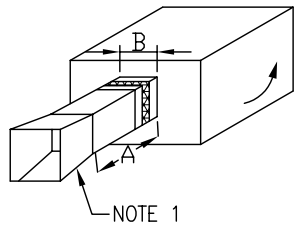

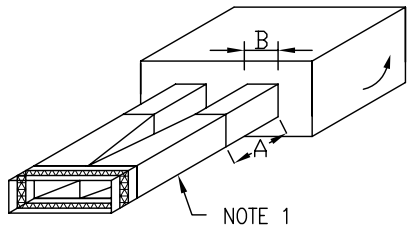

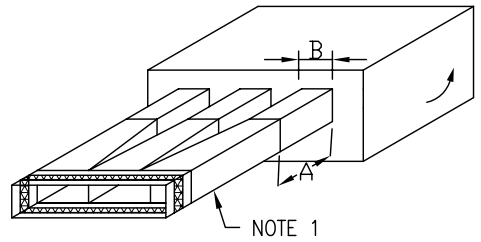

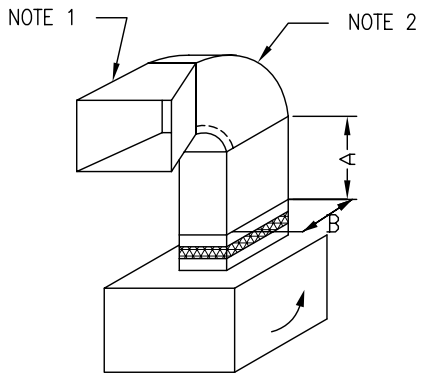

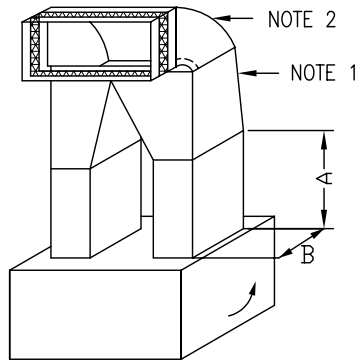

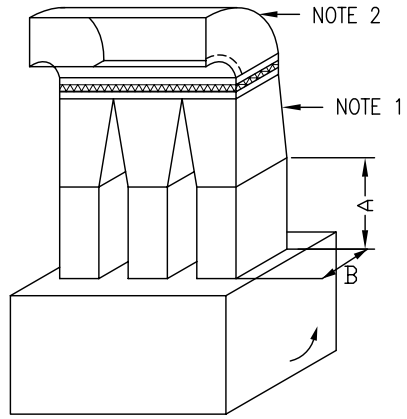

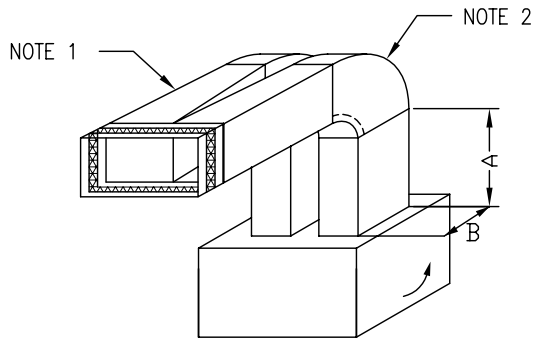

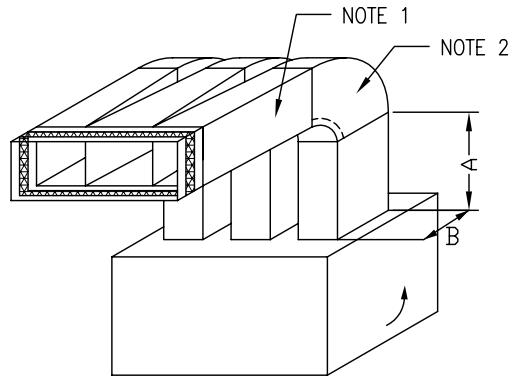

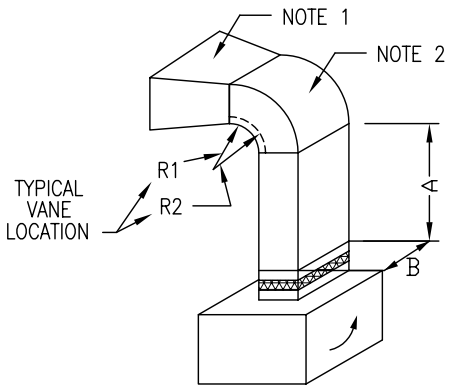

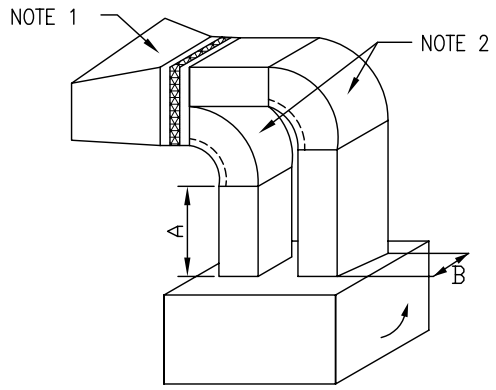

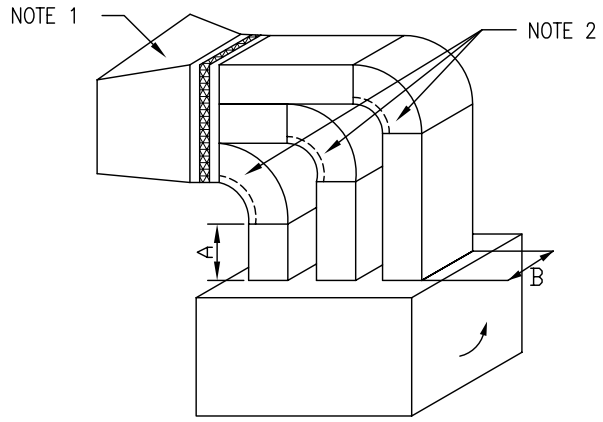

DUCT CONNECTION TO EQIPMENT

NOTE:

1. TRANSFORMATIONS TO SUPPLY DUCT HAVE MAXIMUM SLOPE OF 1" IN 7".
2. SQUARE ELBOWS WITH DOUBLE THICKNESS VANES MAY BE SUBSTITUTED.
3. DO NOT INSTALL DUCTS SO THAT THE AIR FLOW IS COUNTER TO FAN ROTATION. IF NECESSARY, TURN FAN SECTION.
4. TRANSFORMATIONS AND UNITS SHALL BE ADEQUATELY SUPPORTED SO NO WEIGHT IS ON THE FLEXIBLE FAN CONNECTION.
5. IF THERE IS NO RESTRICTION FOR AVALBLE SPACE, THE BEST METHODE FOR MULTIPLE FAN CONNECTION IS "PANTS CONNECTION".

R1 = 0.75B (6" MINIMUM).
A = 1 1/2B TO 2 1/2B.
B = LONGEST DIMENSION OF OUTLET OPENING.

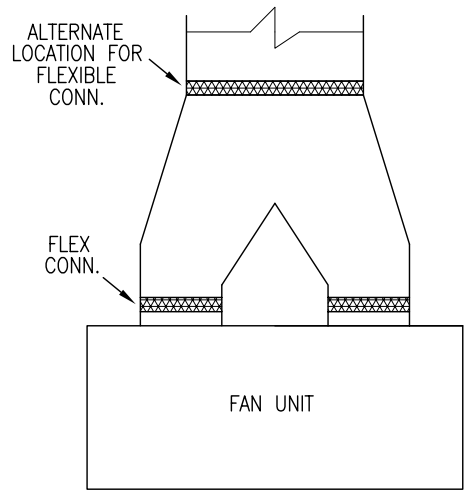

TYPICAL CONSTRUCTION OF "PANTS" CONNECTION ON TWO-FAN UNIT
NOTE 5

THIS DOCUMENT IS THE PEROPERTY OF SPIC. IT IS CONFIDENTIAL AND ALL RIGHTS RESERVED, NEITHER THE WHOLE NOR PART OF THIS DOCUMENT MAY BE DISCLOSED TO ANY THIRD PARTY, REPRODUCED, STORED IN ANY RETRIVAL SYSTEM OR TRANSMITTED IN ANY FORM OR BY ANY MEANS WITHOUT THE PRIOR WRITTEN CONSENT OF SPIC.

PIDEC

PERTROCHEMICAL INDUSTRIES
DESIGN & ENGINEERING CO.
PROJ. NO. : 1203

SABALAN METHANOL PROJECT

HVAC STANDARD DRAWING

Doc. No.: 1203-00-HV-SDG-786 | Rev. : 01

شرکت صنایع پتروشیمی سبلان
سپیدان
Sabalan Petrochemical Industries Co.

OWNER :
SABALAN PETROCHEMICAL INDUSTRIES CO.
PROJ. NO. : 89/S-G/102

SINGLE FAN CONNECTION

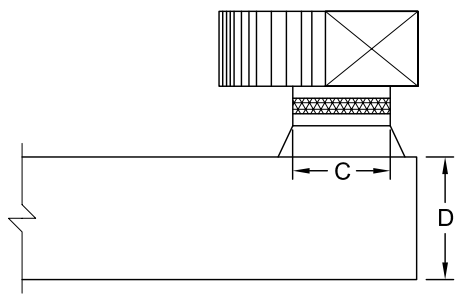

PLAN VIEW

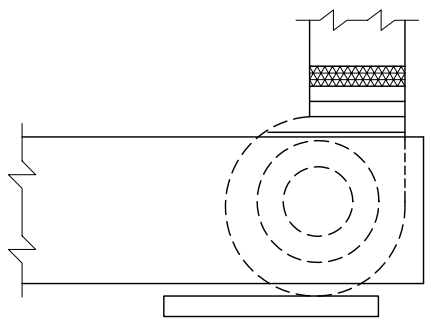

ELEVATION VIEW

DIMENSIONS :
C= DIAMETER OF FAN INLET
D = 1 1/4 x C

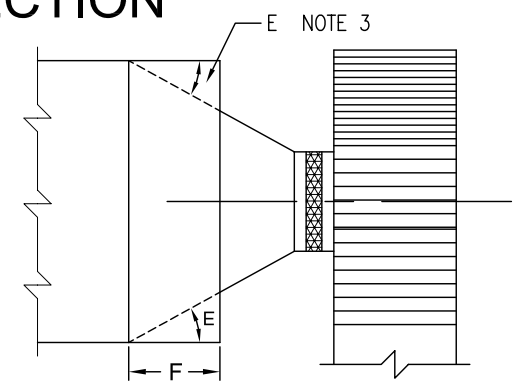

NOTES 1+2 PLAN VIEW

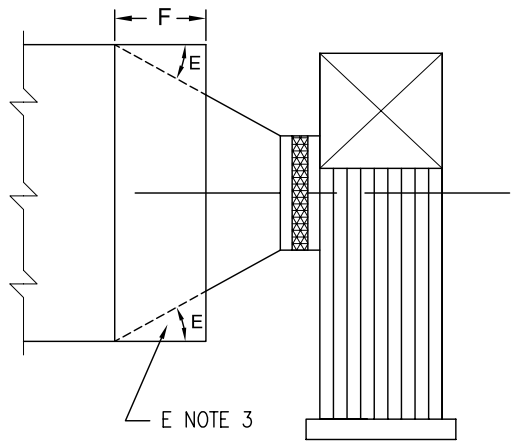

ELEVATION VIEW

E = 45° MAXIMUM 30° PREFERRED
F = 36" MINIMUM FOR ACCESS DOOR

DOUBLE INLET FAN

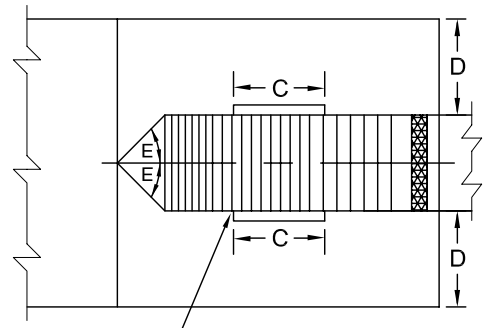

NOTES 1+2 PLAN VIEW

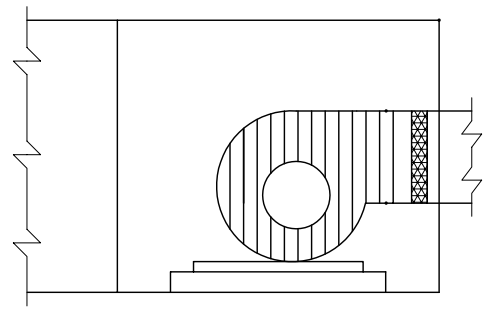

ELEVATION VIEW (SECTION)

NOTE:

1. FAN SHOULD BE CENTERED IN CASING TO PROVIDE GOOD FLOW CONDITIONS.
2. ALL EQUIPMENT SHOULD BE CENTERED FOR BEST PERFORMANCE.
3. ANGLE "E" IS USED TO DETERMINE "F" DISTANCE BETWEEN EQUIPMENT AND FAN.
4. R1 = 0.75B (6" MINIMUM).
5. USE SQUARE VANED ELBOW FOR BEST RESULTS, WITH TAKE-OFF IN OPPOSITE DIRECTION TO FAN ROTATION.
6. SLOPE OF 1" IN 4" RECOMMENDED FOR LOW VELOCITY (UP TO 2500).
7. SLOPE OF 1" IN 7" RECOMMENDED FOR HIGH VELOCITY (MORETHAN 2500).

DUCT CONNECTION TO EQIPMENT: FAN INLET CONNNECTIONS

BEST

TRANSFORMATION 1" IN 7" PREFERRED,
1" IN 4" PERMITTED NOTE 6 & 7

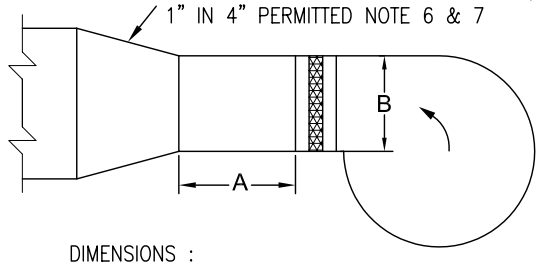

DIMENSIONS :
A = 1 1/2 x B TO 2 1/2 x B
B = FAN DISCHARGE OPENING,
LARGEST DIMENSION

GOOD

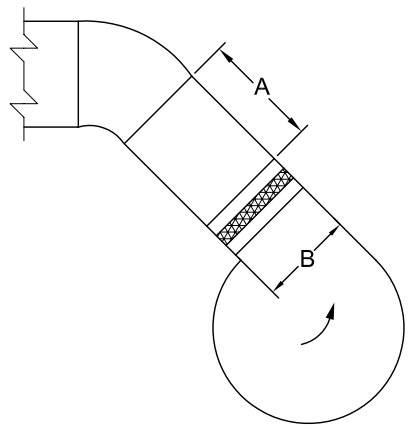

GOOD

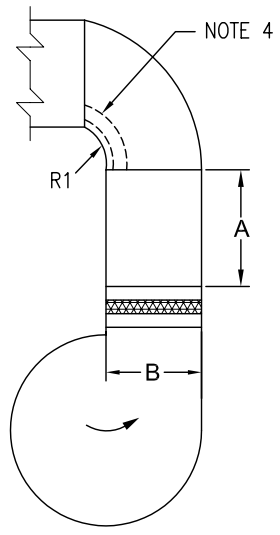

FAIR

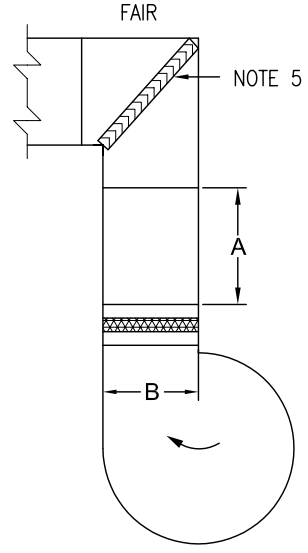

DUCT CONNECTION TO EQIPMENT: FAN DISCHARGE CONNNECTIONS

THIS DOCUMENT IS THE PERDPERTY OF SPIC. IT IS CONFIDENTIAL AND ALL RIGHTS RESERVED, NEITHER THE WHOLE NOR PART OF THIS DOCUMENT MAY BE DISCLOSED TO ANY THIRD PARTY, REPRODUCED, STORED IN ANY RETRIVAL SYSTEM OR TRANSMITTED IN ANY FORM OR BY ANY MEANS WITHOUT THE PRIOR WRITTEN CONSENT OF SPIC.

PIDEC

PERTROCHEMICAL INDUSTRIES
DESIGN & ENGINEERING CO.
PROJ. NO. : 1203

SABALAN METHANOL PROJECT

HVAC STANDARD DRAWING

Doc. No.: 1203-00-HV-SDG-786 Rev. : 01

شرکت صنایع پتروشیمی سبلان
سپیکو
Sabalan Petrochemical Industries Co.

OWNER :
SABALAN PETROCHEMICAL INDUSTRIES CO.
PROJ. NO. : 89/S-G/102

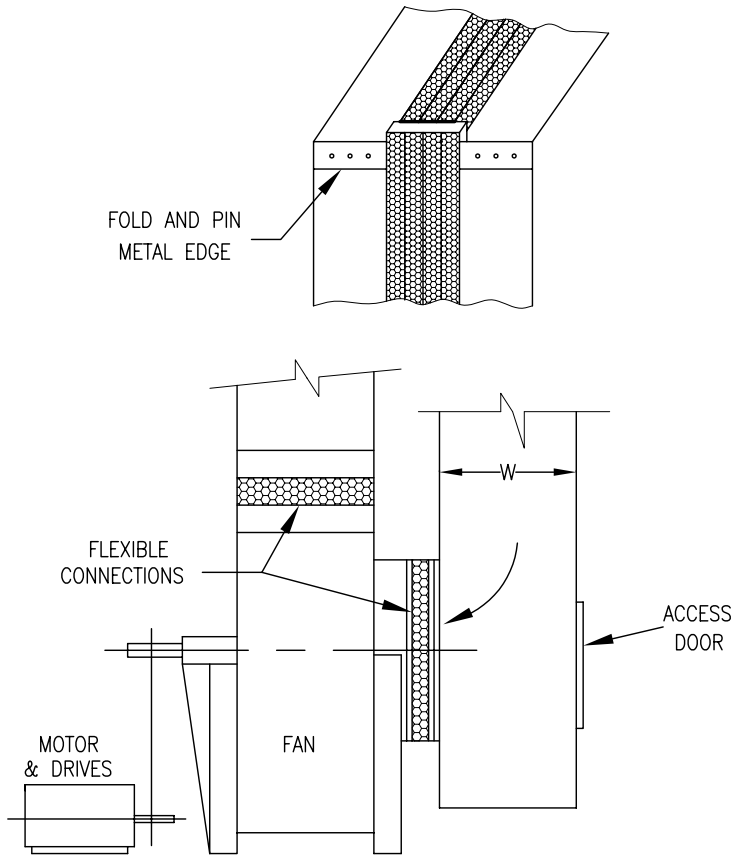

FIG. A

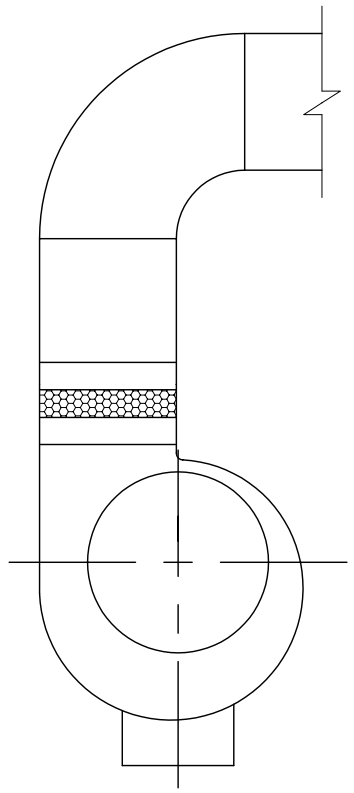

FIG. B

CONSULT SMACNA DUCT DESIGN MANUAL AND AMCA PUBLICATION 201
REGARDING PERFORMANCE OF VARIOUS
INLET AND OUTLET CONDITIONS.

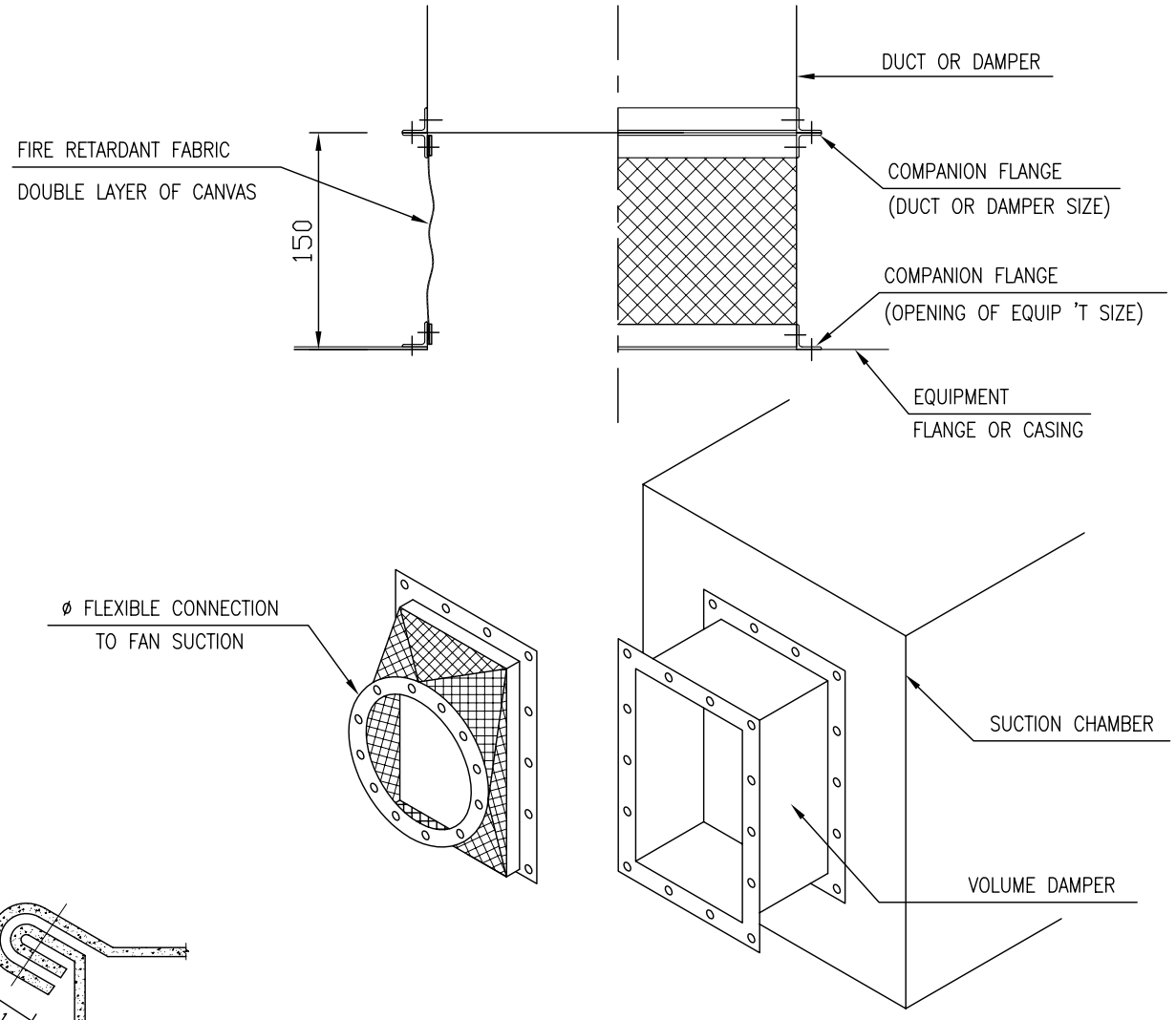

FLEXIBLE CONNECTION DETAIL

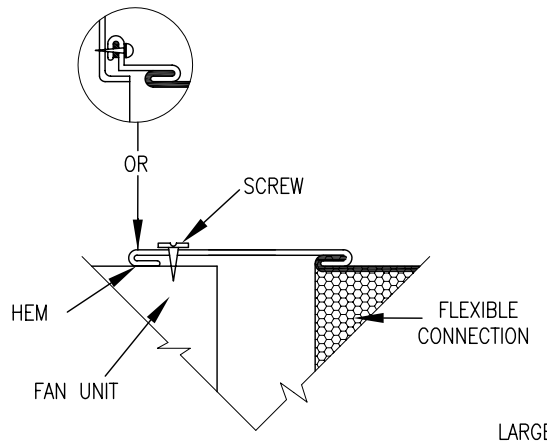

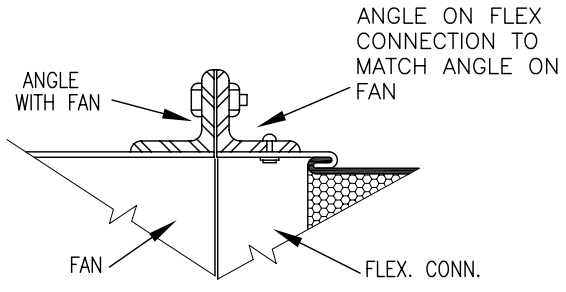

LARGE FAN CONNECTION

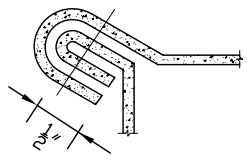

FOLD, ADD SEALANT
AND STAPLE 1" O.C.

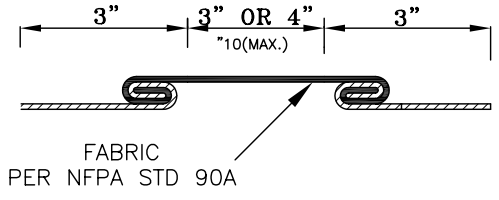

SECTION

FLEXIBLE CONNECTIONS AT FAN

THIS DOCUMENT IS THE PERDPERTY OF SPIC. IT IS CONFIDENTIAL AND ALL RIGHTS RESERVED, NEITHER THE WHOLE NOR PART OF THIS DOCUMENT MAY BE DISCLOSED TO ANY THIRD PARTY, REPRODUCED, STORED IN ANY RETRIVAL SYSTEM OR TRANSMITTED IN ANY FORM OR BY ANY MEANS WITHOUT THE PRIOR WRITTEN CONSENT OF SPIC.

PERTROCHEMICAL INDUSTRIES DESIGN & ENGINEERING CO. PROJ. NO. : 1203	**SABALAN METHANOL PROJECT** HVAC STANDARD DRAWING Doc. No.: 1203-00-HV-SDG-786 Rev.: 01	OWNER : SABALAN PETROCHEMICAL INDUSTRIES CO. PROJ. NO. : 89/S-G/102

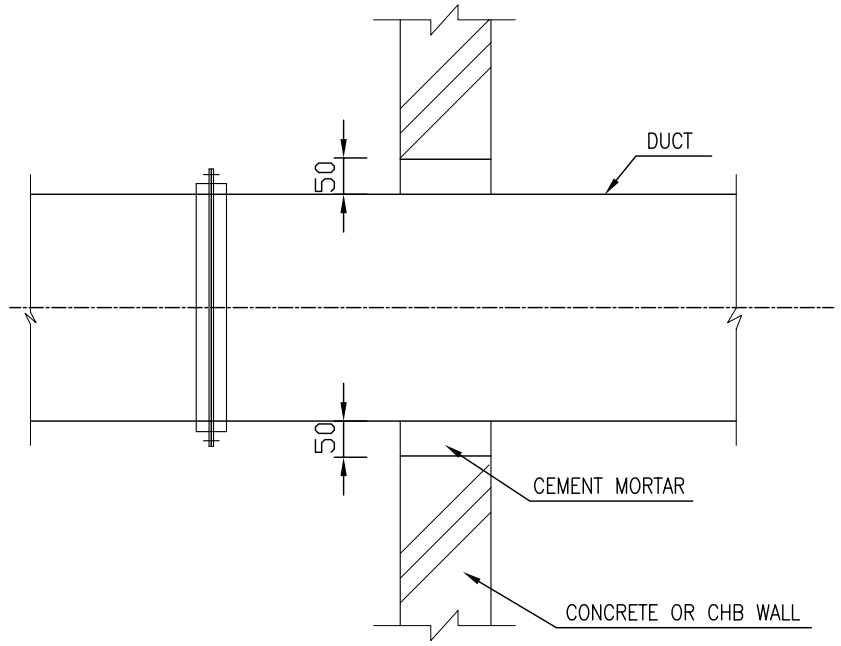

DUCT PENETRATION: INTERIOR WALL (WITHOUT INSULATION)

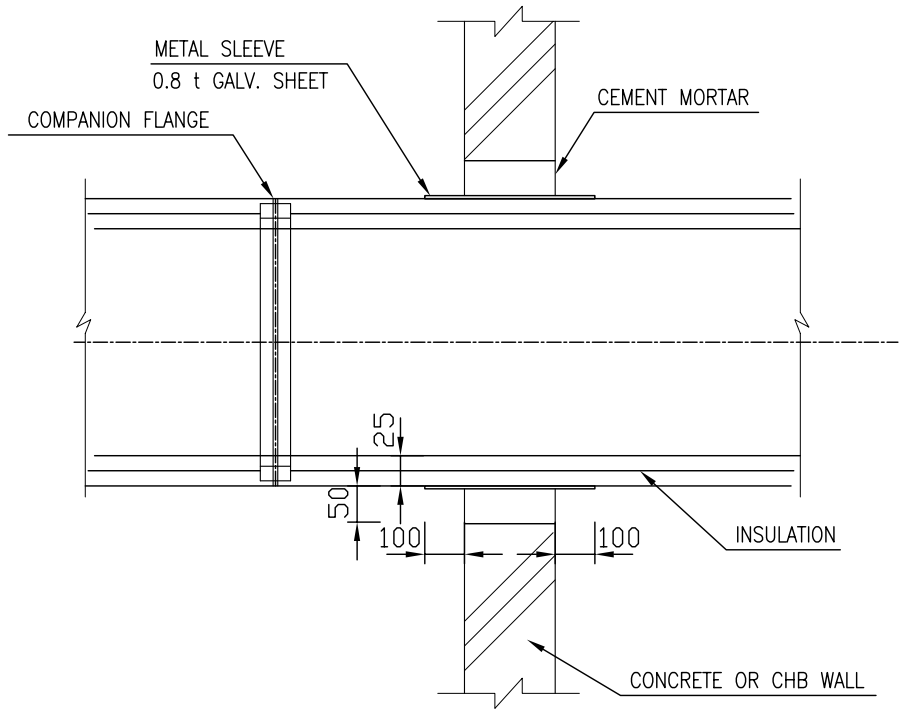

DUCT PENETRATION: INTERIOR WALL (WITH INSULATION)

NOTE:

1. EQUAL CLEARANCE SHALL BE REQUIRED AT THE TOP AND VERTICAL SIDES OF FIRE DAMPER .

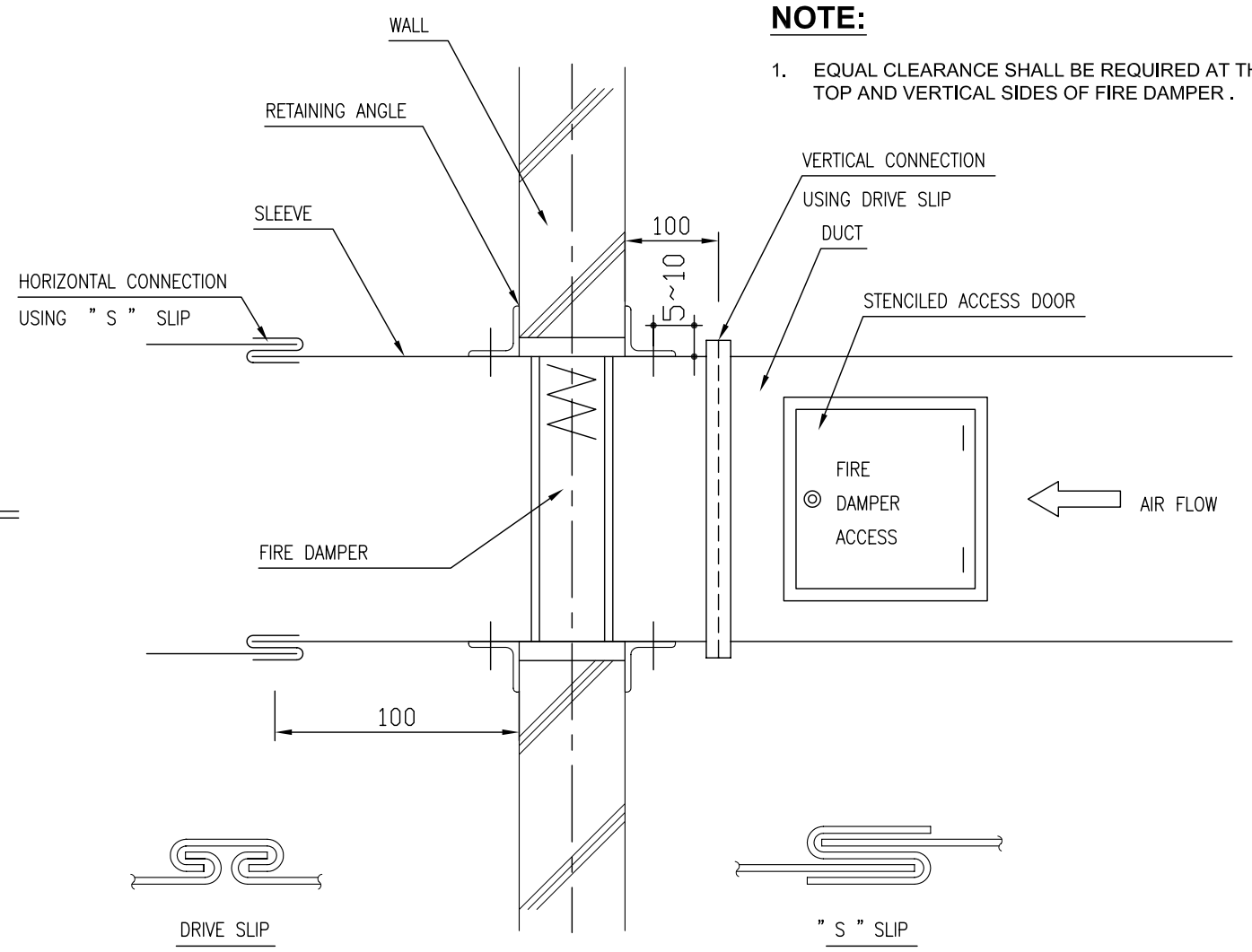

LONGEST SIDE OF RECTANGULAR DUCT	SLEEVE THK (G A)	RETAINING ANGLE (mm)	FASTENING SLEEVE WITH FIRE DAMPER FASTENING SLEEVE WITH RETAINING ANGLE		
			TACK WELD (L = 15mm)	BOLT (6 ø)	TAPPING SCREW (#)
UP TO 900	16	40 x 40 x 5	200 mm OC	200 mm OC	150 mm OC
OVER 900	14	50 x 50 x 5	150 mm OC	150 mm OC	NA

FIRE DAMPER: CONNECTION

THIS DOCUMENT IS THE PERDPERTY OF SPIC. IT IS CONFIDENTIAL AND ALL RIGHTS RESERVED, NEITHER THE WHOLE NOR PART OF THIS DOCUMENT MAY BE DISCLOSED TO ANY THIRD PARTY, REPRODUCED, STORED IN ANY RETRIVAL SYSTEM OR TRANSMITTED IN ANY FORM OR BY ANY MEANS WITHOUT THE PRIOR WRITTEN CONSENT OF SPIC.

PERTROCHEMICAL INDUSTRIES
DESIGN & ENGINEERING CO.
PROJ. NO. : 1203

SABALAN METHANOL PROJECT

HVAC STANDARD DRAWING

Doc. No.: 1203-00-HV-SDG-786 | Rev. : 01

OWNER :
SABALAN PETROCHEMICAL INDUSTRIES CO.
PROJ. NO. : 89/S-G/102

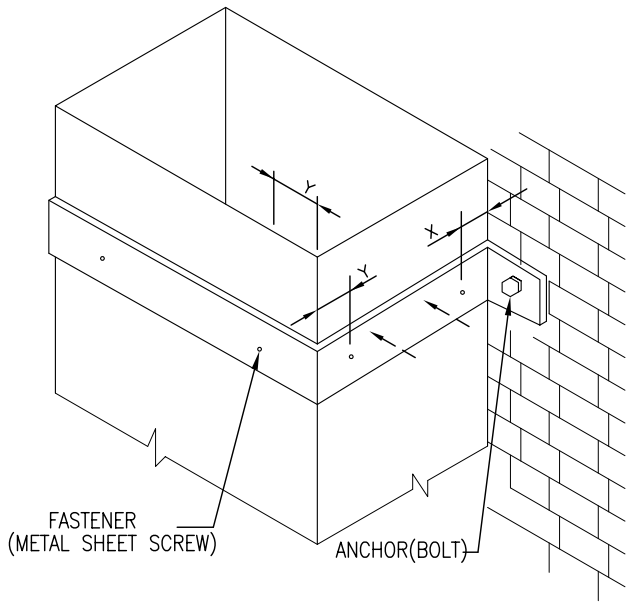

FIG. A

FIG. A–SUGGESTED SIZING

DUCT SIZE mm (in)	BAND mm (in)
450 (18") x 300 (12")	38 (1 1/2") x 1.6 (1/16")
600 (24") x 500 (20")	25 (1") x 3 (1/8")

DUCT THK. mm. (GA)	ALLOWABLE LOAD PER FASTENER* (Kg)
0.5 (28) , 0.55 (26)	11.5
0.70 (24) , 0.85 (22) , 1.0 (20)	16
1.3 (18) , 1.6 (16)	23

*WELD, BOLT OR No. 8 SCREW (MIN.)
DEVIATION PERMITTED BY OTHER ANALYSIS
X = 25 mm.(1"), Y = 50 mm.(2"),
ADD OTHERS TO ACCOMMODATE LOAD.
MINIMUM OF 3 ON 600 mm.(24") WIDTH AND UP.
ADD ALONG SIDES NEAREST ANCHORS.

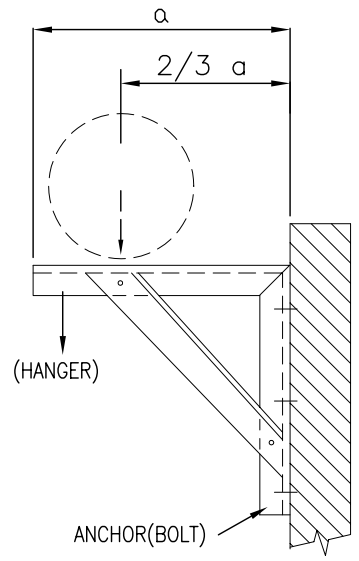

KNEE BRACKET FOR ROUND DUCT
LOCATION POINT

FIG. C

NOTE:

1. BRACKETS ARE SIZED FOR 3.65 m (12 ft) OF DUCT, MAX.
2. LOCATE DUCTS AGAINST WALL OR MAXIMUM OF 50 mm.(2") AWAY FROM WALL.
3. EACH WALL ANCHOR SHALL SATISFY THE FOLLOWING CRITERIA UNLESS OTHER ANALYSIS IS MADE.

A. TENSILE LOAD= 3/8 x DUCT WEIGHT; SAFETY FACTOR OF 4.
B. SHEAR LOAD = 1/2 x DUCT WEIGHT; SAFETY FACTOR OF 4.

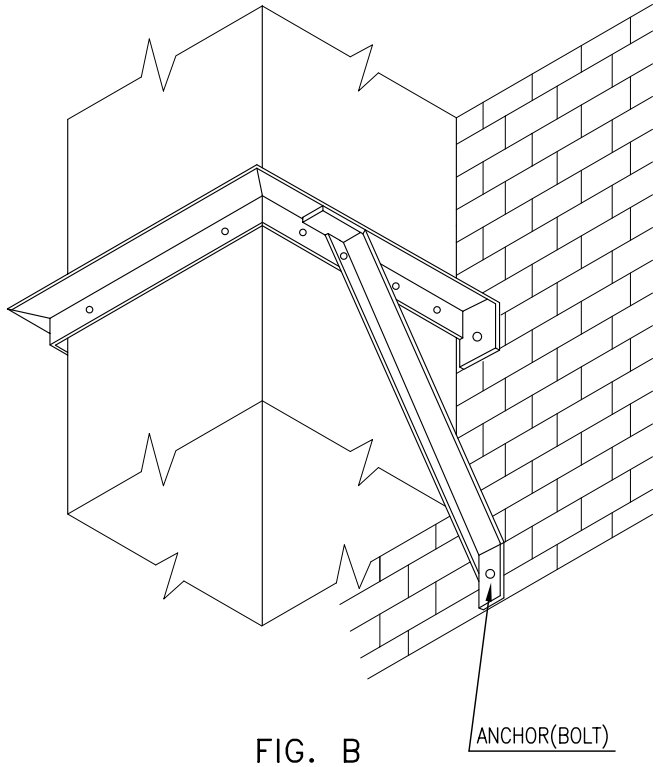

FIG. B

FIG. B–SUGGESTED SIZING

DUCT SIZE mm (in)	ANGLE mm (in)
750 (30") x 300 (12")	25 (1") x 25 (1") x 3 (1/8")
900 (36") x 450 (18")	25 (1") x 25 (1") x 3 (1/8")
1050 (42") x 600 (24")	32 (1 1/4") x 32 (1 1/4") x 3 (1/8")
1200 (48") x 750 (30")	32 (1 1/4") x 32 (1 1/4") x 3 (1/8")

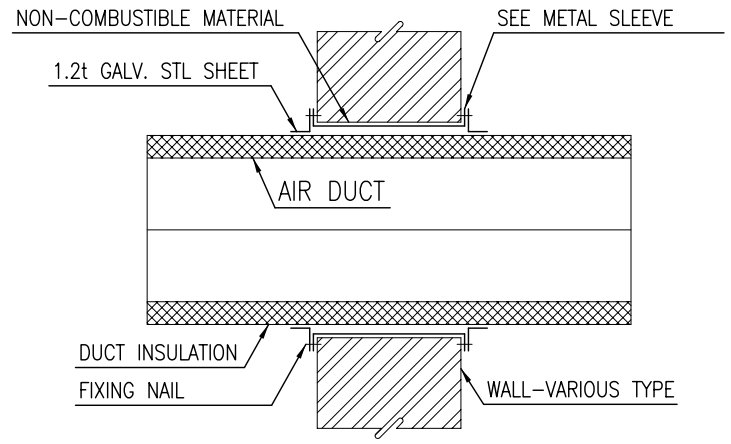

OPENING SIZE= DUCT SIZE + 100mm

FIG. D

DUCT WALL SUPPORTS

THIS DOCUMENT IS THE PERODPERTY OF SPIC. IT IS CONFIDENTIAL AND ALL RIGHTS RESERVED, NEITHER THE WHOLE NOR PART OF THIS DOCUMENT MAY BE DISCLOSED TO ANY THIRD PARTY, REPRODUCED, STORED IN ANY RETRIVAL SYSTEM OR TRANSMITTED IN ANY FORM OR BY ANY MEANS WITHOUT THE PRIOR WRITTEN CONSENT OF SPIC.

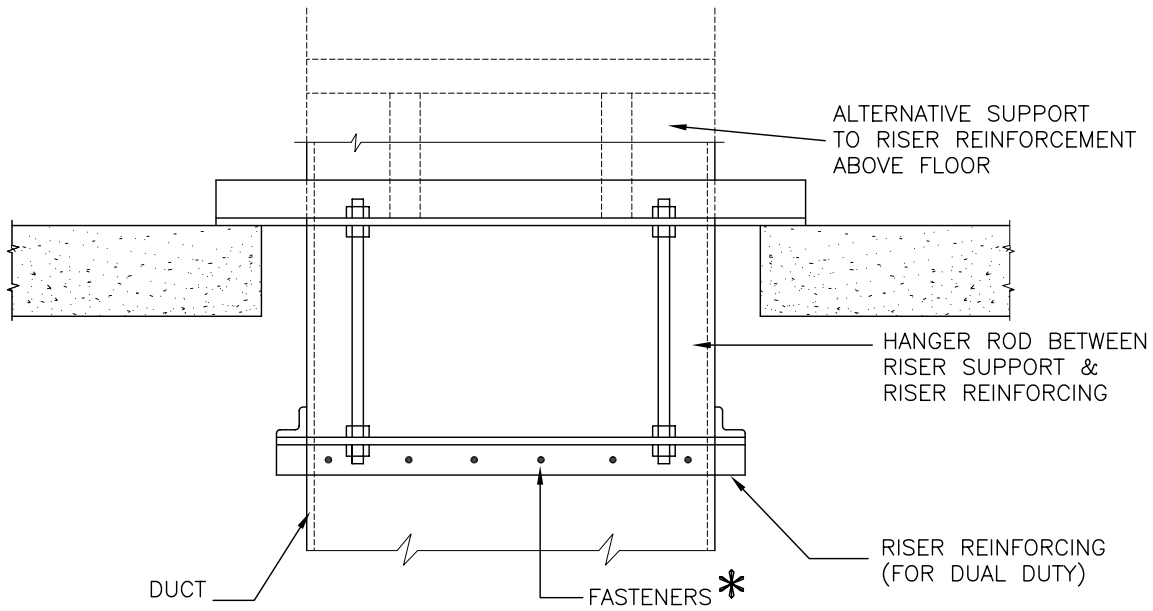

FIG. B

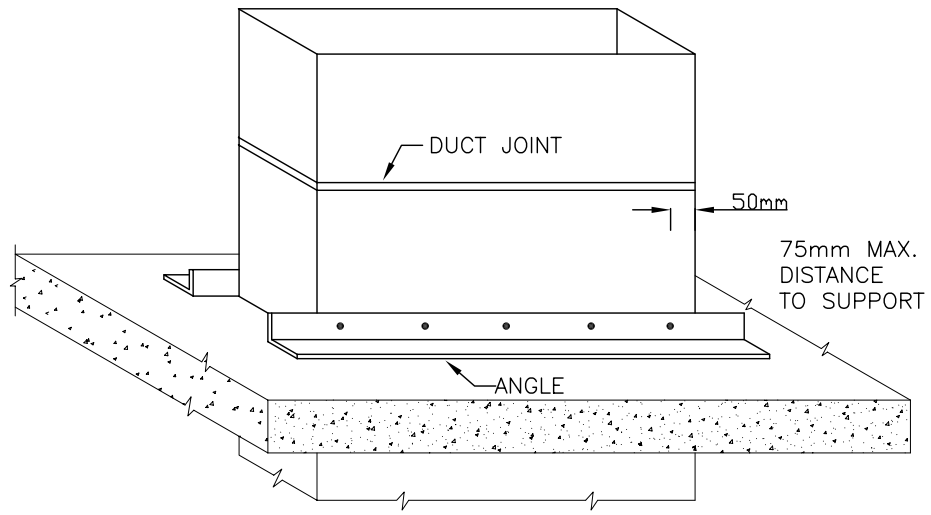

FIG. A

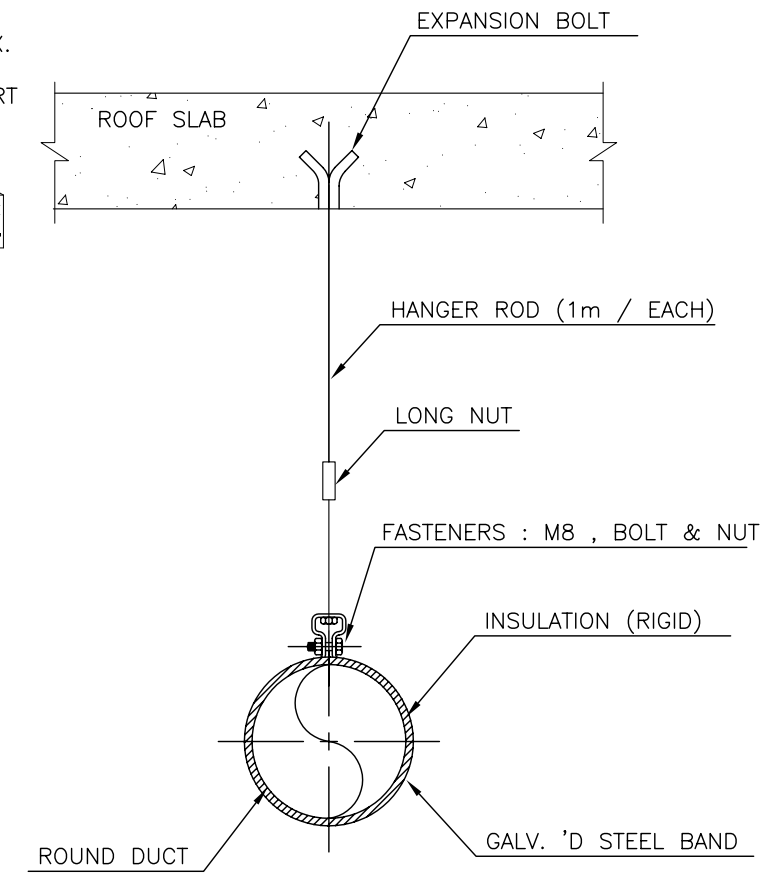

* MINIMUM NUMBER OF FASTENERS
ON EACH OF TWO SUPPORT BARS

LARGEST DUCT DIM. mm (IN)	MINIMUM NUMBER OF FASTENERS
100 (16") AND DOWN	2
425 (17")–600 (24")	3
OVER 600 (24")	LARGEST DUCT DIM. DIVIDED BY 203(8)

SUGGESTED SIZING FOR
SUPPORT OF 12ft. OF DUCT

DUCT SIZE mm (IN)	ANGLE mm (IN)
900 (36") x 450 (18")	40 (1 1/2") x 40 (1 1/2") x 3 (1/8")
1200 (48") x 600 (24")	40 (1 1/2") x 40 (1 1/2") x 3 (1/8")
1500 (60") x 750 (30")	40 (1 1/2") x 40 (1 1/2") x 5 (13/64")
1500 (60") x 1500 (60")	40 (1 1/2") x 40 (1 1/2") x 6 (1/4")
	OR 50 (2") x 50 (2") x 3 (1/8")

OVER 1500mm. INCREASE ANGLE SIZE AS
REQUIRED FOR SPACE & DUCT SIZE

HANGER ROD	MAX . SPACING (mm)
ø 9	3600

ROUND DUCT SUPPORT

RISER SUPPORTS FROM FLOOR

THIS DOCUMENT IS THE PERODPERTY OF SPIC. IT IS CONFIDENTIAL AND ALL RIGHTS RESERVED, NEITHER THE WHOLE NOR PART OF THIS DOCUMENT MAY BE DISCLOSED TO ANY THIRD PARTY, REPRODUCED, STORED IN ANY RETRIVAL SYSTEM OR TRANSMITTED IN ANY FORM OR BY ANY MEANS WITHOUT THE PRIOR WRITTEN CONSENT OF SPIC.

PIDEC

PERTROCHEMICAL INDUSTRIES
DESIGN & ENGINEERING CO.
PROJ. NO. : 1203

SABALAN METHANOL PROJECT

HVAC STANDARD DRAWING

Doc. No.: 1203-00-HV-SDG-786 | Rev. : 01

شرکت صنایع پتروشیمی سبلان
سپیکو
Sabalan Petrochemical Industries Co.

OWNER :
SABALAN PETROCHEMICAL
INDUSTRIES CO.
PROJ. NO. : 89/S-G/102

LONGEST SIDE OF DUCT (in)	SUPPORTING ANGLE	HANGER ROD	SPACING (mm)
UP TO 22	L–25x25x3	ø 9	2500
23 TO 40	L–40x40x3	ø 9	2500
41 TO 60	L–40x40x5	ø 9	2500
61 TO 90	L–40x40x5	ø 12	2500
91 AND OVER	L–40x40x5	ø 12	2500

SUPPORTING ANGLE LENGTH "L" (mm)	SUPPORTING ANGLE	HANGER ROD	SPACING
UP TO 1200	L– 40x40x3	ø 9	2400
1201 TO 1800	L– 40x40x5	ø 9	2400
1801 TO 2400	L– 50x50x6	ø 12	1800
2401 TO 3000	L– 75x75x6	ø 12	1800

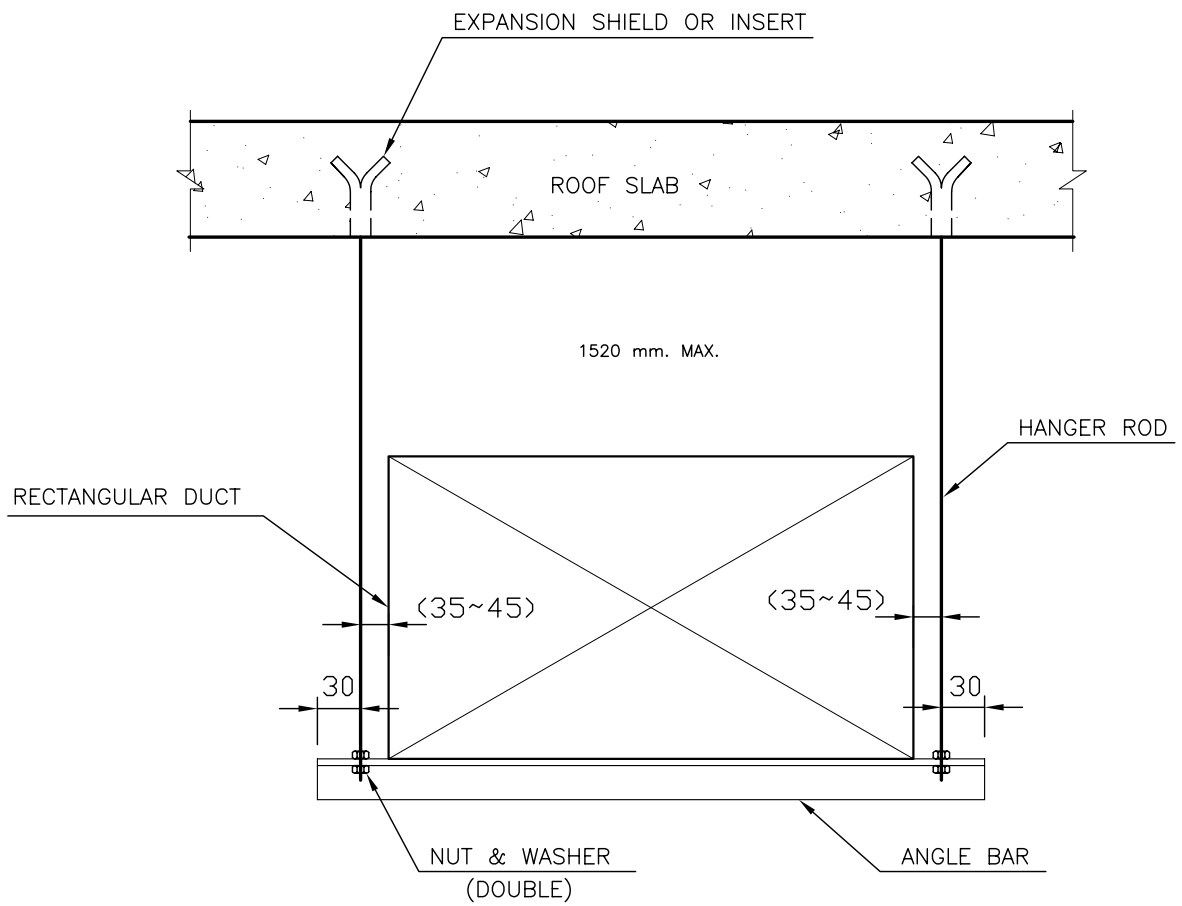

DUCT SUPPORT: HANGER (1)

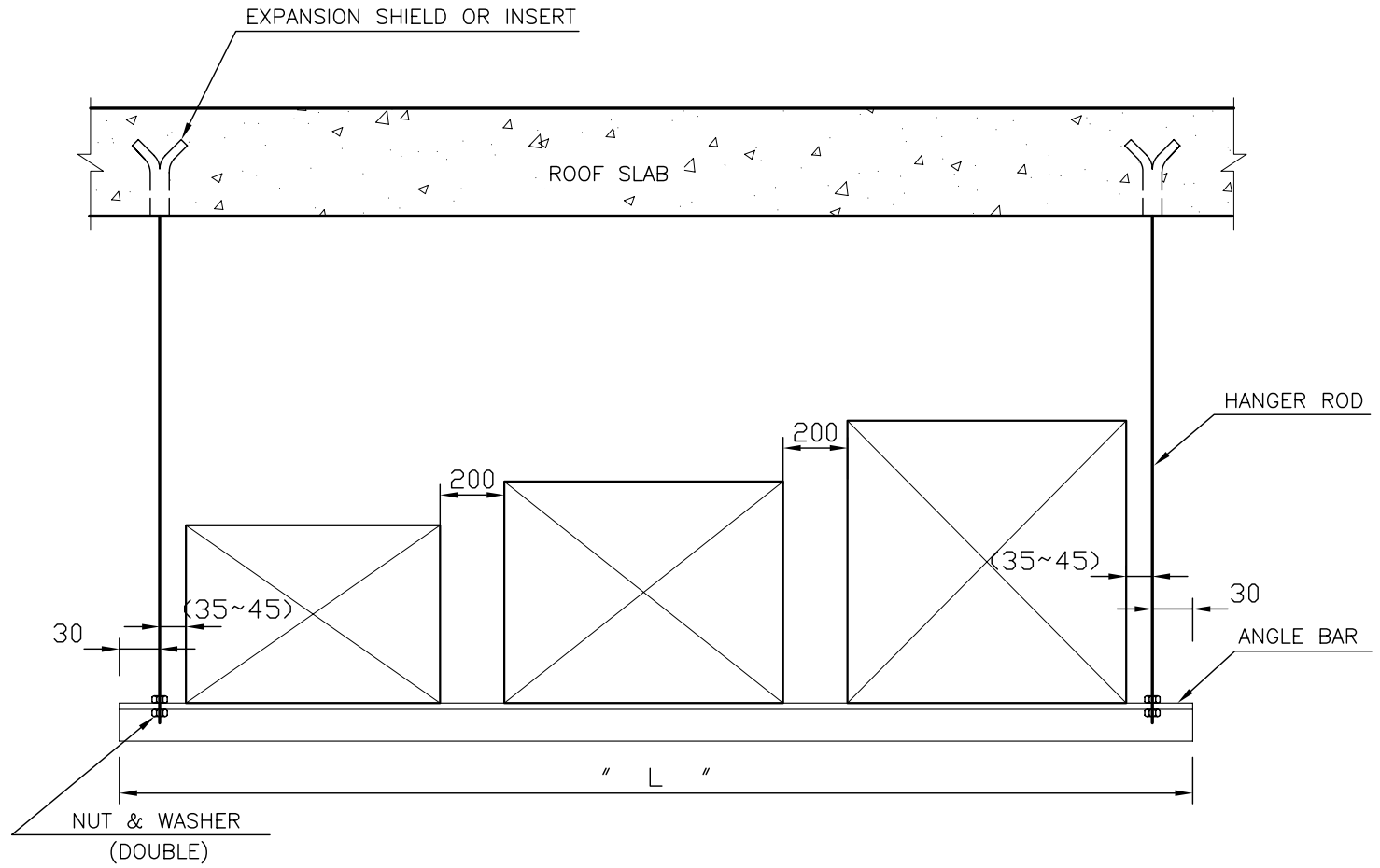

DUCT SUPPORT: HANGER (2)

THIS DOCUMENT IS THE PERDPERTY OF SPIC. IT IS CONFIDENTIAL AND ALL RIGHTS RESERVED, NEITHER THE WHOLE NOR PART OF THIS DOCUMENT MAY BE DISCLOSED TO ANY THIRD PARTY, REPRODUCED, STORED IN ANY RETRIVAL SYSTEM OR TRANSMITTED IN ANY FORM OR BY ANY MEANS WITHOUT THE PRIOR WRITTEN CONSENT OF SPIC.

PERTROCHEMICAL INDUSTRIES
DESIGN & ENGINEERING CO.
PROJ. NO. : 1203

SABALAN METHANOL PROJECT

HVAC STANDARD DRAWING

Doc. No.: 1203-00-HV-SDG-786 | Rev. : 01

OWNER :
SABALAN PETROCHEMICAL INDUSTRIES CO.
PROJ. NO. : 89/S-G/102

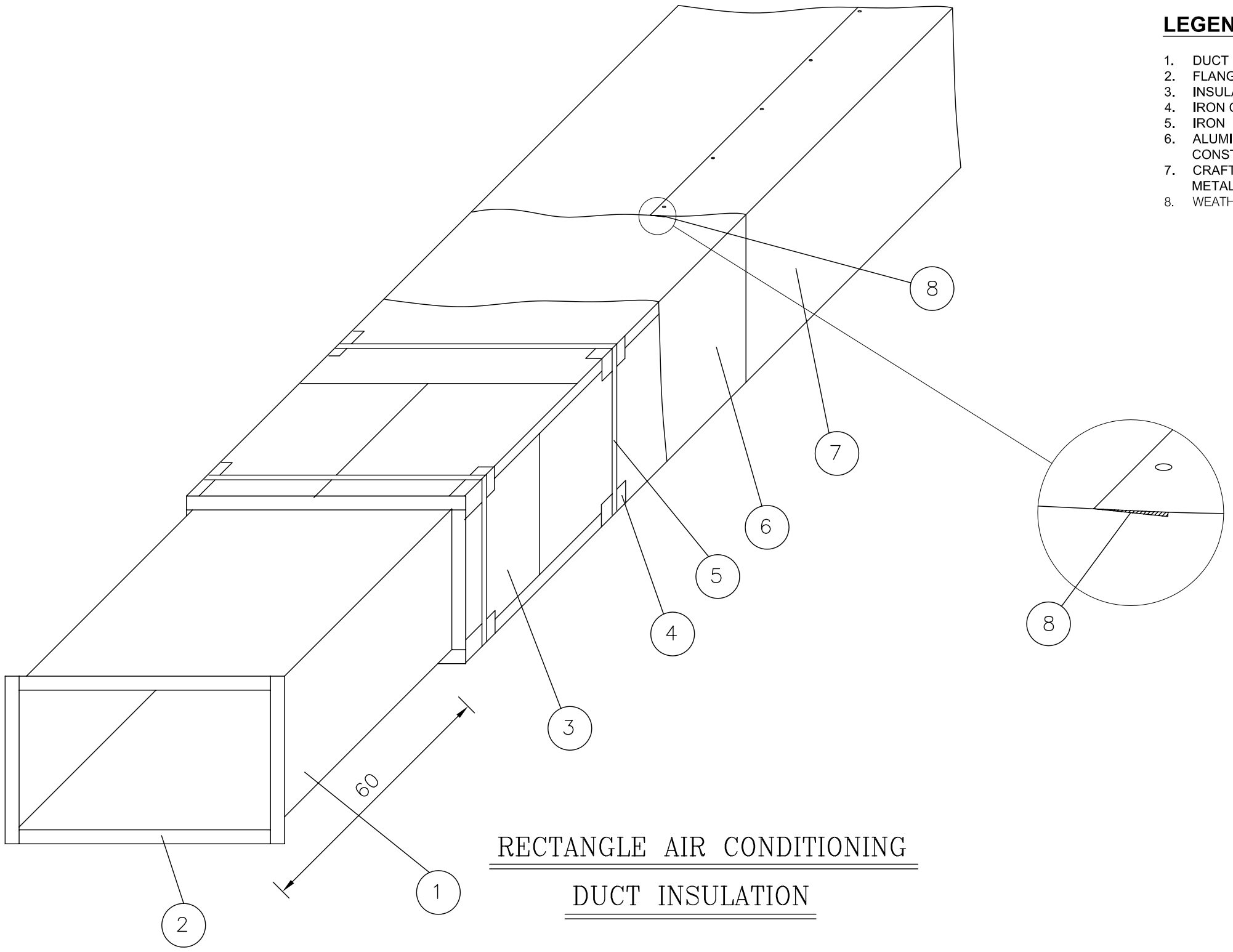

LEGEND:

1. DUCT
2. FLANGE
3. INSULATION
4. IRON CUSION,1.5 OR 2mm
5. IRON
6. ALUMINUM FOIL OR SHEET METAL (SEE CONSTRUCTION SPEC.)
7. CRAFT REINFORCING (NONE FOR ALUMINUM SHEET METAL)
8. WEATHER RESISTANT MASTIC SEAL

RECTANGLE AIR CONDITIONING DUCT INSULATION

THIS DOCUMENT IS THE PERDPERTY OF SPIC. IT IS CONFIDENTIAL AND ALL RIGHTS RESERVED. NEITHER THE WHOLE NOR PART OF THIS DOCUMENT MAY BE DISCLOSED TO ANY THIRD PARTY, REPRODUCED, STORED IN ANY RETRIVAL SYSTEM OR TRANSMITTED IN ANY FORM OR BY ANY MEANS WITHOUT THE PRIOR WRITTEN CONSENT OF SPIC.

PIDEC

PERTROCHEMICAL INDUSTRIES
DESIGN & ENGINEERING CO.
PROJ. NO. : 1203

SABALAN METHANOL PROJECT

HVAC STANDARD DRAWING

Doc. No.: 1203-00-HV-SDG-786 | Rev. : 01

شرکت صنایع پتروشیمی سبلان
سهامی خاص
Sabalan Petrochemical Industries Co.

OWNER :
SABALAN PETROCHEMICAL INDUSTRIES CO.
PROJ. NO. : 89/S-G/102

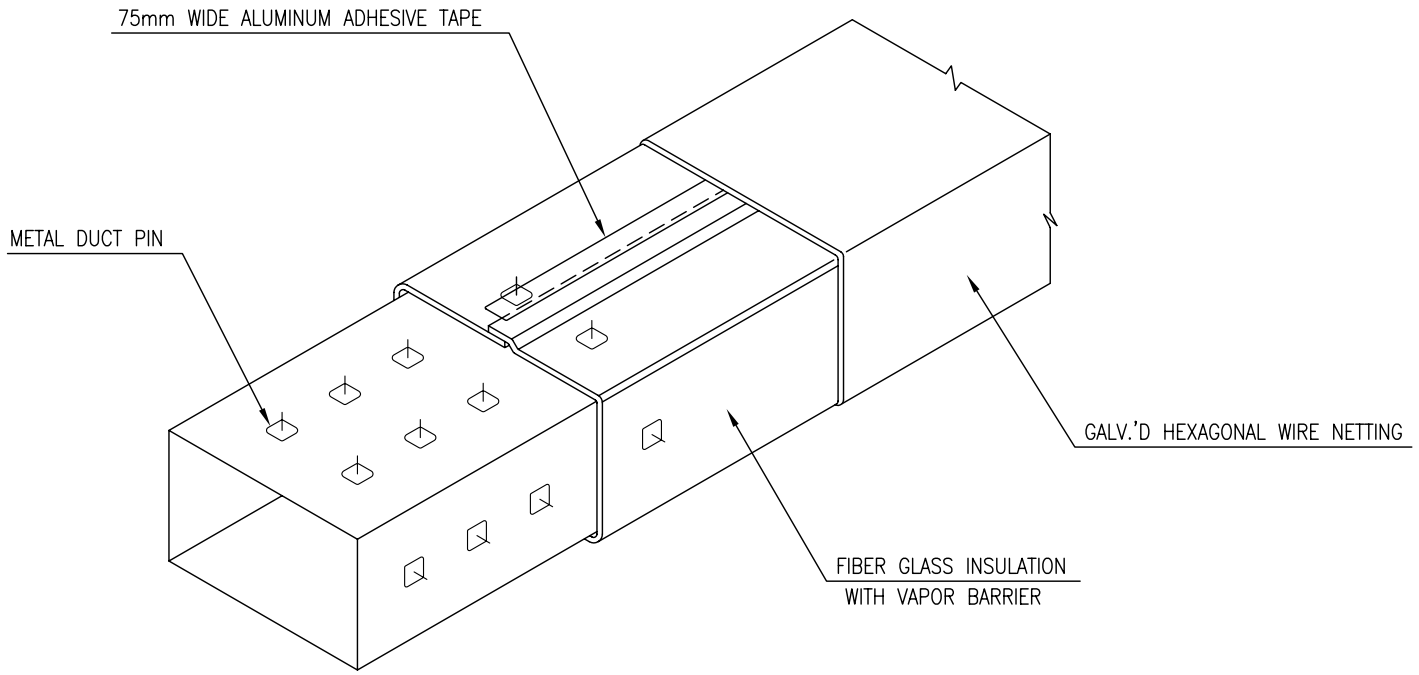

NOTE:

1. FOR DUCT INSULATION THICKNESS SEE TABLE BELOW.

Location Of Duct	Supply Air	Fresh Air	Return Air	Exhaust Air
Air Conditioned Areas	25 mm	25 mm	Not Insulated	Not Insulated
Suspended Ceiling Void Above Air Conditioned Areas	25 mm	Not Insulated	25 mm	Not Insulated
Non–Air Conditioned Areas	25 mm	Not Insulated	25 mm	Not Insulated
Exposed To Ambient Air Conditions	50 mm	Not Insulated	25 mm	Not Insulated

DUCT INSULATION THICKNESS SCHEDULE

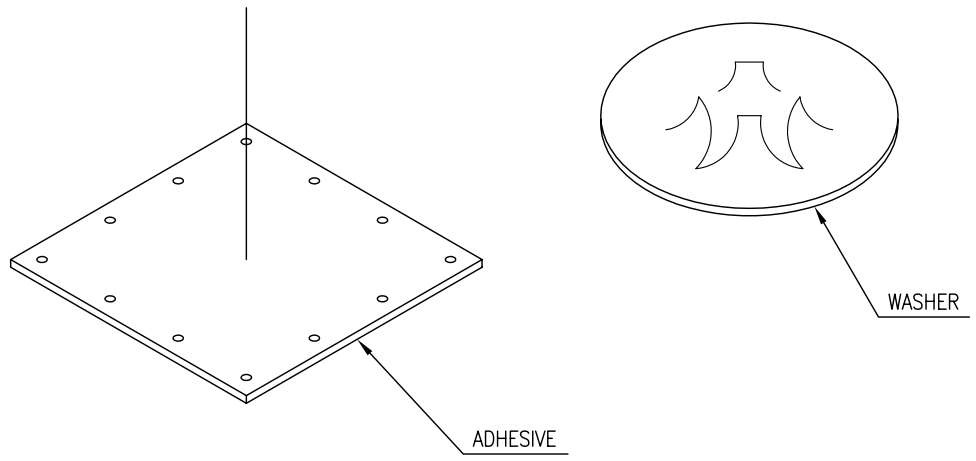

SPACING OF METAL DUCT PIN: APPROX. 300 mm C/C

THIS DOCUMENT IS THE PERPERTY OF SPIC. IT IS CONFIDENTIAL AND ALL RIGHTS RESERVED, NEITHER THE WHOLE NOR PART OF THIS DOCUMENT MAY BE DISCLOSED TO ANY THIRD PARTY, REPRODUCED, STORED IN ANY RETRIVAL SYSTEM OR TRANSMITTED IN ANY FORM OR BY ANY MEANS WITHOUT THE PRIOR WRITTEN CONSENT OF SPIC.

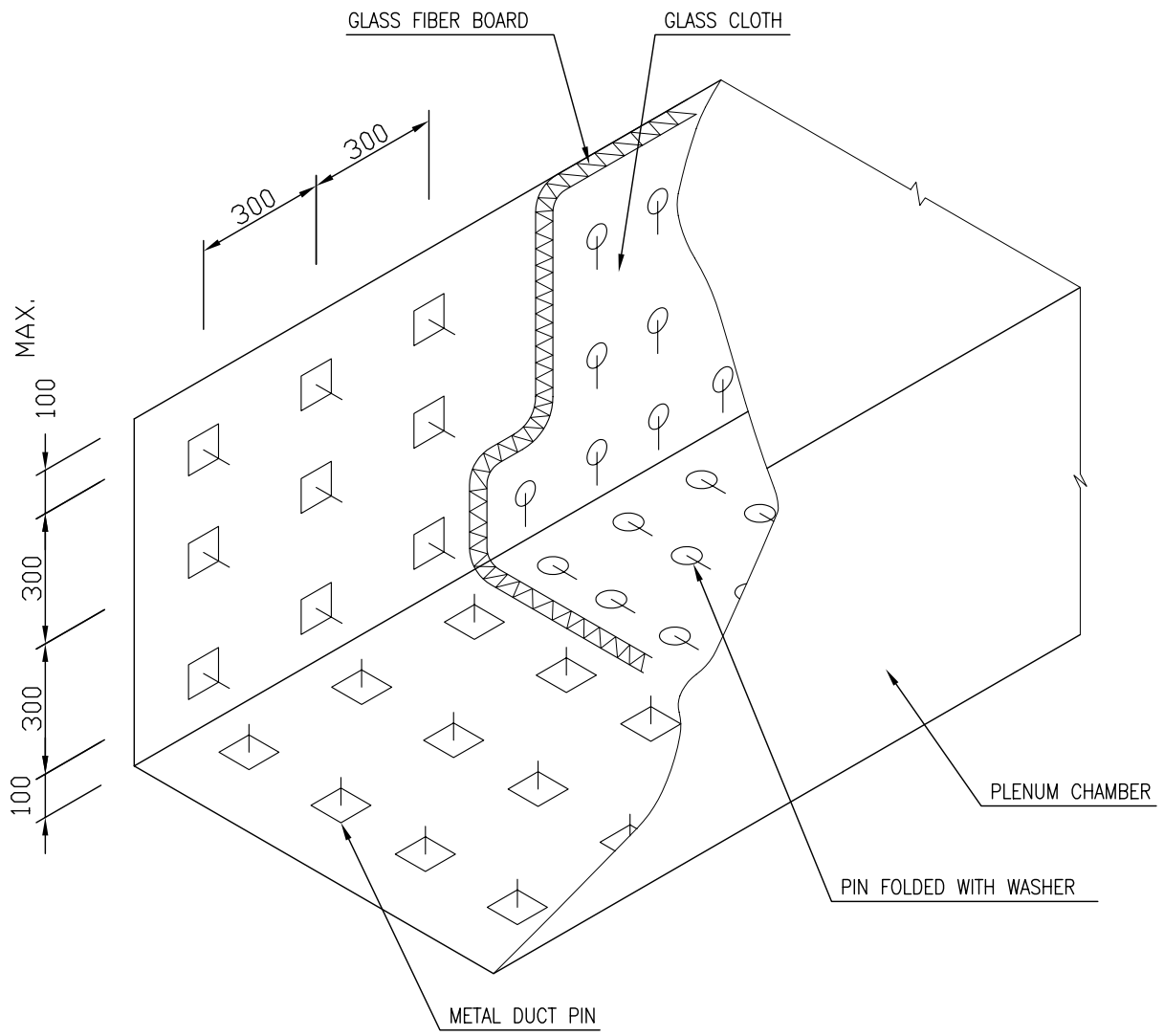

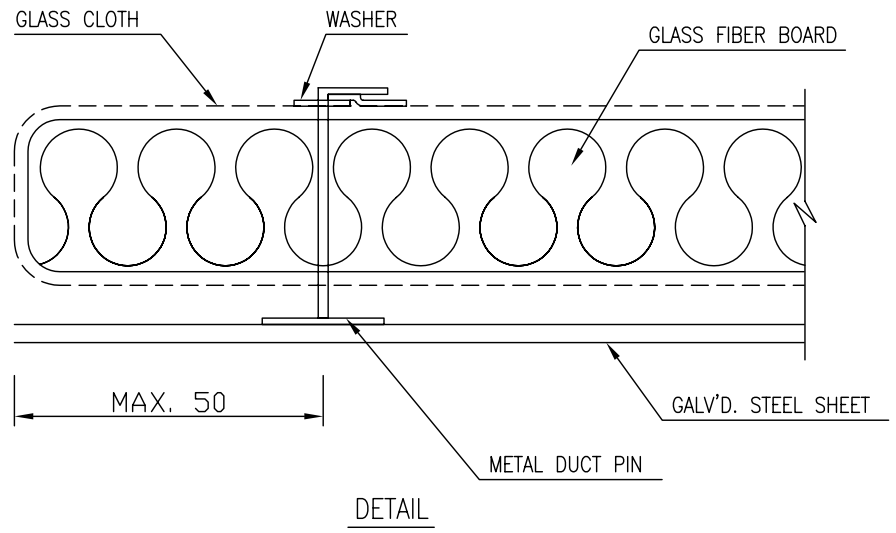

DUCT WITH ACOUSTIC LINING

THIS DOCUMENT IS THE PERQPERTY OF SPIC. IT IS CONFIDENTIAL AND ALL RIGHTS RESERVED, NEITHER THE WHOLE NOR PART OF THIS DOCUMENT MAY BE DISCLOSED TO ANY THIRD PARTY, REPRODUCED, STORED IN ANY RETRIVAL SYSTEM OR TRANSMITTED IN ANY FORM OR BY ANY MEANS WITHOUT THE PRIOR WRITTEN CONSENT OF SPIC.

PERTROCHEMICAL INDUSTRIES DESIGN & ENGINEERING CO. PROJ. NO. : 1203	**SABALAN METHANOL PROJECT**		OWNER : SABALAN PETROCHEMICAL INDUSTRIES CO. PROJ. NO. : 89/S-G/102
	HVAC STANDARD DRAWING		
	Doc. No.: 1203-00-HV-SDG-786	Rev. : 01	